FALCON RME
250-GALLON TACK DISTRIBUTOR

OPERATION, PARTS AND REPAIR MANUAL

FALCON ROAD MAINTENANCE EQUIPMENT, INC.
2600 W SALZBURG RD
FREELAND, MI 48623

Phone (989) 495-9332
Fax (989) 495-9342
www.falconrme.com

TABLE OF CONTENTS

MATERIAL SAFETY DATA SHEETS CAN BE FOUND IN THE "RESOURCES" SECTION OF THE WEBSITE WWW.FALCONRME.COM

Safety Alert Symbols and Signal Words 4

Operator Warnings (Read before using equipment) ... 5

General Trailer Safety Information 7

Reporting Safety Defects 7

Major Hazards
- Driving Too Fast 8
- Failure to Adjust Handling While Towing a Trailer 8
- Trailer Not Properly Coupled to the Hitch 9
- Incorrect Use of Breakaway Brake 10
- Mismatch of Trailer and Hitch 11
- Unsafe Tires, Lug Nuts or Wheels 11
- Do Not Exceed GVWR 13
- No Riders 13
- Keep Flammable Liquids Away From Trailer 13
- Check Electrical Components 14
- Hazards From Modifying Your Trailer 14
- Axle Bolts, Frame, Suspension and Structure 14
- Lug Nuts (Bolts) 15
- Wheel Rims 15

Falcon RME Tack Distributor Limited Warranty 16

Inspection, Service and Preparation BEFORE EACH USE 17

Inspection, Service and Preparation EVERY THREE MONTHS …..... 18

Inspection, Service and Preparation EVERY SIX MONTHS 18

Inspection, Service and Preparation EVERY 12 MONTHS 19

Lubrication Schedule 19

WARNING STICKER FROM TACK DISTRIBUTOR……..…….. 20

Attaching Trailer to Tow Vehicle …..... 21

Starting the Diesel Burner and Setting Temperature Controller …….22-26
TROUBLESHOOTING THE BECKETT BURNER

Operating Instruction Instructions / Sticker from Trailer…… 26-27

Replacement Parts and Numbers 28

Battery Charging Instructions 30

Wiring Color Code 31

Tire Safety Information 32

"Before You Begin" Instructions Summarized 42

Spray System Helpful Hints 45

Beckett Burner Manual 46

Beckett Burner Parts 59

Beckett Burner Primary Controller 60

Omega Temperature Controller 62

Beckett Burner Relay Wiring 63

Electric Breakaway Instructions 64

MATERIAL SAFETY DATA SHEETS CAN BE FOUND IN THE "RESOURCES" SECTION OF THE WEBSITE WWW.FALCONRME.COM

REFERENCE MSDS OF YOUR TACK MATERIAL FOR SAFETY AND USE INFORMATION PRIOR TO USING IN FALCON TACK DISTRIBUTOR.

SAFETY ALERT SYMBOLS AND SIGNAL WORDS

This manual references the words DANGER, WARNING, CAUTION and NOTICE. The level of risk is indicated by the following signal words. Do not attempt to use the tack distributor until **reading and understanding** the safety and operational considerations of the equipment.

Danger

DANGER - Immediate hazards which WILL result in severe personal injury or death if the warning is ignored.

Warning

WARNING -- Hazards or unsafe practices which COULD result in severe personal injury or death if the warning is ignored.

Caution

CAUTION -- Hazards or unsafe practices which could result in minor or moderate injury if the warning is ignored.

Notice

NOTICE -- Practices that could result in damage to the trailer or other property.

OPERATOR WARNINGS

WARNING INSTRUCTIONS ARE SUMMARIZED BELOW AND APPEAR THROUGHOUT THE MANUAL. DO NOT USE THE TACK DISTRIBUTOR UNTIL YOU HAVE READ AND UNDERSTOOD ALL THE SAFETY INFORMATION CONTAINED IN THIS DOCUMENT.

SHOULD ANY SAFETY OR WARNING DECALS BECOME UNREADABLE, NOTIFY FALCON at (989) 495-9332 AND REPLACEMENTS WILL BE PROVIDED AT NO CHARGE.

General Warnings

DANGER: NEVER USE FLAMMABLE MATERIAL NEAR EQUIPMENT. DOING SO MAY CAUSE SERIOUS INJURY.

DANGER: THE DIESEL BURNER SHOULD ONLY BE SERVICED BY AN AUTHORIZED SERVICE PERSON. SERIOUS INJURY OR DEATH COULD RESULT FROM IMPROPER SERVICING OF THE DIESEL BURNER.

DANGER: RAISE JACK BEFORE MOVING TRAILER. FAILURE TO RAISE THE JACK CAN CAUSE THE TRAILER TO FLIP AND CAUSE SERIOUS INJURIES.

DANGER: NEVER ATTEMPT TO SERVICE THE EQUIPMENT UNLESS ALL COMPONENTS AND CONTENTS ARE COLD OR SERIOUS INJURY COULD OCCUR.

DANGER: ALWAYS USE CROSSED SAFETY CHAINS AND CONFIRM PROPER COUPLING OF TRAILER TO TOWING VEHICLE BEFORE MOVING THE TRAILER.

DANGER: ENSURE THAT ALL EQUIPMENT IS SECURED TO THE TACK DISTRIBUTOR BEFORE MOVING OR SERIOUS INJURY AND OR DEATH COULD RESULT.

DANGER: DO NOT ALLOW THE DIESEL BURNER TO RUN IN AN AREA THAT IS NOT WELL-VETILATED.

DANGER: TO PREVENT ACCIDENTAL MOVEMENT OF TRAILER WHEN UNHOOKED FROM TOW VEHICLE, ALWAYS USE WHEEL CHOCKS AND STORE ON A FLAT SURFACE.

WARNING: WHEN PLUGGING IN BATTERY CHARGER TO BUILDING POWER, ENSURE THAT A 120VAC GROUND FAULT CIRCUIT INTERRUPT OUTLET IS USED. USE A HEAVY-DUTY UL APPROVED EXTENSION CORD AND PLUG EXTENSION CORD INTO THE TACK DISTRIBUTOR <u>BEFORE</u> CONNECTING TO GROUND FAULT BUILDING POWER OUTLET.

WARNING: REWIRING THE TACK DISTRIBUTOR IMPROPERLY MAY CAUSE COMPONENT FAILURE AND VOID THE WARRANTY.

CAUTION: ALWAYS WEAR PERSONAL PROTECTIVE GEAR WHEN OPERATING OR CLEANING THE EQUIPMENT.

WARNING: ALLOW TACK MATERIAL TO COOL BEFORE REMOVING EXCESS TACK FROM THE TANK AT THE END OF THE DAY.

CAUTION: NEVER FILL THE TOP CYLINDER OF THE TACK TANK WITH TACK MATERIAL AND LEAVE 4" BELOW THE BASE OF THE FILL SPOUT TO ALLOW FOR EXPANSION AS TACK HEATS. DO NOT ALLOW HEATED TACK IN TANK TO SPLASH AS ADDITIONAL TACK IS ADDED. FILL SPOUT SHOULD ALWAYS BE EMPTY.

NOTICE: DO NOT SPRAY TACK MATERIAL THROUGH SPRAY SYSTEM UNLESS IT HAS BEEN DILUTED (ACCORDING TO MANUFACTURER'S DIRECTIONS), HEATED THEN BLENDED TO REMOVE CHUNKS. INSUFFICIENTLY DILUTED OR BLENDED TACK MATERIAL SPRAYED THROUGH THE SPRAY SYSTEM WILL CAUSE THE SPRAY SYSTEM TO FAIL.

NOTICE: FAILURE TO PERFORM SPRAY SYSTEM FLUSH PROCEDURE AFTER EACH USE WILL CAUSE THE SPRAY SYSTEM COMPONENTS TO FAIL.

Loss of control of the trailer or trailer/tow vehicle combination can result in death or serious injury. The most common causes for loss of control of the trailer are:

- Driving too fast for the weather conditions
- Driving too fast (maximum speed when towing a trailer is 60 mph)
- Overloading the tack tank
- Trailer improperly coupled to the hitch
- Inadequate tow vehicle or towing hitch
- No braking on trailer
- Not maintaining proper tire pressure
- Not keeping lug nuts tight and
- Not properly maintaining the trailer structure.

An owner's manual that provides general trailer information cannot cover all of the specific details necessary for the proper combination of every trailer, tow vehicle and hitch, therefore, you must read, understand and follow the instructions given by the tow vehicle and trailer hitch manufacturers, as well as the instructions in this manual.

Reporting Safety Defects

If you believe that your vehicle has a defect that could cause a crash or could cause injury or death, you should immediately inform the National Highway Traffic Safety Administration (NHTSA) in addition to notifying Falcon RME at 120 Waldo Ave., Midland, MI 48642 Phone (989) 495-9332.

If NHTSA receives similar complaints, it may open an investigation, and if it finds that a safety defect exists in a group of vehicles, it may order a recall and remedy campaign. However, NHTSA cannot become involved in individual problems between you, your dealer, or Falcon RME.

To contact NHTSA, you may call the Vehicle Safety Hotline toll-free at 1-888-327-4236 (TTY: 1-800-424-9153), go to http://www.safercar.gov; or write to: Administrator, NHTSA, 12 New Jersey Avenue SE, Washington, DC 20590. You can also obtain other information about motor vehicle safety from http://www.safercar.gov.

MAJOR HAZARDS

Driving Too Fast

With ideal road conditions, the maximum speed when safely towing a trailer is 50 mph. If you drive too fast, the trailer tires will overheat and possibly blow out. As your speed increases, you are more likely to suddenly lose control. Never exceed 50 mph while towing the trailer.

Warning

Driving too fast for conditions can result in loss of control and cause death or serious injury.

Decrease your speed as road, weather and lighting conditions deteriorate.

Failure to Adjust Handling While Towing a Trailer

When towing a trailer, you will have decreased acceleration, increased stopping distance, and increased turning radius (which means you must make wider turns to keep from hitting curbs, vehicles, and anything else that is on the inside corner). In addition, you will need a longer distance to pass, due to slower acceleration and increased length.

- **Be alert for slippery conditions. You are more likely to be affected by slippery road surfaces when driving a tow vehicle with a trailer.**
- **Anticipate the trailer "swaying". Swaying is the trailer's reaction to the air pressure wave caused by passing trucks and busses. Continued pulling of the trailer provides a stabilizing force to correct swaying. Do not apply the brakes to correct trailer swaying.**
- **Check rearview mirrors frequently to observe the trailer and traffic.**
- **Use Low gear when driving down steep or long grades. Use the engine and transmission as a brake. Do not ride the brakes, as they can overheat and become ineffective.**
- **Be aware of your trailer height.**

Trailer Not Properly Coupled to the Hitch

It is critical that the trailer be securely coupled to the hitch, and that the safety chains are correctly attached. Uncoupling may result in death or serious injury.

Warning

Proper selection and condition of the coupler and hitch are essential to safely towing your trailer. A loss of coupling may result in death or serious injury.

Be sure the hitch load rating is equal to or greater than the load rating of the coupler.

Be sure the hitch size matches the coupler size.

Observe the hitch for wear, corrosion and cracks before coupling. Replace worn, corroded or cracked hitch components before coupling the trailer to the tow vehicle.

Be sure the hitch components are tight before coupling the trailer to the tow vehicle.

Warning

An improperly coupled trailer can result in death or serious injury.

Do not move the trailer until:
1) The coupler is secured and locked to hitch
2) The safety chains are secured to the tow vehicle; and
3) The trailer jack is fully retracted.

Do not tow the trailer on the road until:
1) Tires and wheels are checked
2) The trailer brakes are checked
3) The breakaway switch is connected to the tow vehicle
4) Everything is secured to the trailer (i.e. tools, compactor, toolbox closed, electrical enclosure closed, fuel cap on).
5) The trailer lights are connected and checked.

Warning

Improper rigging of the safety chains can result in loss of control of the trailer and tow vehicle, leading to death or serious injury, if the trailer uncouples from the tow vehicle.

1) Fasten chains to frame of tow vehicle. Do not fasten chains to any part of the trailer hitch.

2) Cross chains underneath hitch and couple with enough slack to permit turning and to hold tongue up should the trailer come loose.

Incorrect Use of Breakaway Brake

Falcon trailers are equipped with a breakaway brake system that can apply the brakes on your trailer, should your trailer come loose from the hitch for any reason. The safety chains and breakaway brake system must be in good condition and properly rigged to be effective.

Warning

An ineffective or inoperative breakaway brake system can result in a runaway trailer, leading to death or serious injury if the coupler or hitch fails.

The lanyard should be long enough to allow for turning corners, yet short enough to disengage the pin from the switch before the safety chains on the hitch become taut in a trailer disconnect situation.

The breakaway cable must be connected to the tow vehicle -- NOT to any part of the hitch.

Before towing the trailer, test the breakaway brake system. If the breakaway brake system is not working, do not tow the trailer but have it serviced or repaired before moving.

Mismatch of Trailer and Hitch

Danger

Use of a hitch with a load rating less than the load rating of the trailer can result in loss of control and may lead to death or serious injury.

Use of a tow vehicle with a towing capacity less than the load rating of the trailer can result in loss of control, and may lead to death or serious injury.

Be sure your hitch and tow vehicle are rated for the Gross Vehicle Weight Rating identified on the VIN tag of your trailer.

Unsafe Tires, Lug Nuts or Wheels

It is essential to inspect the trailer tires before each use. If the tire has a bald spot, bulge, cuts, is showing any cords, or is cracked, replace the tire before towing. Tires with inadequate tread will not provide adequate tracking on wet roadways and can result in loss of control, leading to death or serious injury.

Improper tire pressure causes an unstable trailer and can result in a tire blowout and loss of control. Before each tow, you must check the tire pressure. Tire pressure must be checked when tires are cold. Allow three hours cool-down after driving as much as 1 mile at 40 MPH before checking tire pressure. NOTE: Tire pressure identified on VIN tag is the tire pressure at the time the equipment was delivered. Check the pressure rating on the tire to determine the pressure requirements of the tire in case they have been changed.

Warning

Improper tire pressure can result in a blowout and loss of control which can lead to death or serious injury.

Be sure tires are inflated to pressure indicated on side wall of tire before towing trailer.

Lugnuts on trailer wheels are prone to loosen. Before each tow, check to make sure they are tight.

Warning

Metal creep between the wheel rim and lug nuts will cause rim to loosen and could result in a wheel coming off, leading to death or serious injury.

Tighten lug nuts before each tow to 100 foot pounds.

Lug nuts are also prone to loosen after first being assembled. When driving a new trailer (or after wheels have been remounted), check to make sure they are tight after the first 10, 25 and 50 miles of driving and before each tow thereafter.

Failure to perform this check could lead to a wheel parting from the trailer and result in a crash, leading to death or serious injury.

Warning

Lug nuts are prone to loosen after initial installation, which can lead to death or serious injury.

Check lug nuts for tightness on a new trailer or when wheel(s) have been remounted after the first 10, 25 and 50 miles of driving. Use star tightening pattern.

Warning

Improper lug nut torque can cause a wheel parting from the trailer, leading to death or serious injury.

Be sure lug nuts are tight before each tow using star pattern (see page 15).

Do Not Exceed GVWR

The total weight of the load you put in or on the trailer, plus the empty weight of the trailer itself, must not exceed the trailer's Gross Vehicle Weight Rating (GVWR). The maximum load and the GVWR are printed on the VIN tag of the equipment.

Warning

An overloaded trailer can result in loss of control of the trailer, leading to death or serious injury.

Do not exceed the trailer Gross Vehicle Weight Rating (GVWR).

No Riders

Warning

A person riding on the equipment could fall off leading to death or serious injury.

Never allow anyone to ride on a moving trailer.

Keep Flammable Liquids Away from Trailer

Heat generated from the tack tank burner may ignite a flammable liquid.

Warning

Heat generated from the burner of the tack tank may ignite a flammable liquid, leading to death or serious injury.

Never clean the tack distributor with a flammable liquid or use a flammable liquid near the tack distributor.

Check electrical components

Be sure that the electric brakes and all lighting on your trailer are functioning properly before towing your trailer. Electric brakes and lights on a trailer are controlled via a connection to the tow vehicle, generally a multi-pin electrical connector. Check the trailer taillights by turning on your tow vehicle headlights. Check the trailer brake lights by having someone step on the tow vehicle brake pedal while you look at trailer lights. Do the same thing to check the turn signal lights.

Warning

Improper electrical connection between the tow vehicle and the trailer will result in inoperable lights and electric brakes and can lead to collision. Before each tow:

- **Check that the taillights, brake lights, running lights and turn signals work**
- **Check that the electric brakes work by operating the brake controller inside the tow vehicle.**

Hazards From Modifying Your Trailer

Altering your trailer can damage essential safety items. Even simply driving a nail or screw to hang something can damage an electrical circuit, LP gas line, brake line or other feature of the trailer.

Before making any alteration to your trailer, contact your dealer or Falcon RME at (989) 495-9332 and describe the alteration you are contemplating. Alteration of the trailer structure or modification of mechanical, electrical, plumbing, heating or other systems on your trailer must be performed only by qualified technicians who are familiar with the system as installed on your trailer. Alterations may void the warranty.

Axle Bolts, Frame, Suspension and Structure

Warning

Worn or broken suspension parts can cause loss of control and injury may result.

Have trailer professionally inspected annually and after any impact.

Lug Nuts (Bolts)

Tighten the lug nuts to 100 foot-pounds to prevent wheels from coming loose. Use a torque wrench to tighten the fasteners. Over-tightening will result in breaking the studs or permanently deforming the mounting stud holes in the wheels.

FIGURE 1 LUG NUT SEQUENCE OF TIGHTENING

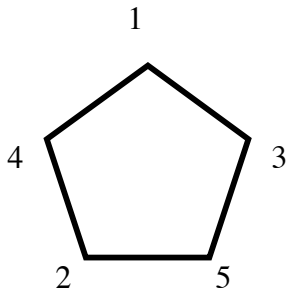

5-BOLT

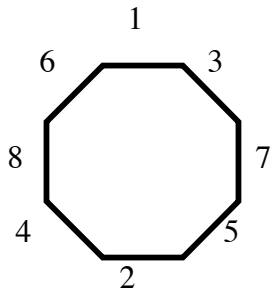

8-BOLT

Warning

Lug nuts are prone to loosen after initial installation, which can lead to death or serious injury.

Follow the sequencing diagram in Figure 1 above based on the number of lug nuts on your axle.

Make three passes through each lug nut -- first at 25 foot pounds, second at 50 foot pounds and third at 100 foot pounds.

Wheel Rims

If the trailer has been struck or impacted on or near the wheels, or if the trailer has struck a curb, inspect the rims for damage (i.e. being out of round) and replace any damaged wheel. Inspect the wheels for damage every year, even if no obvious impact has occurred.

FALCON RME TACK DISTRIBUTOR LIMITED WARRANTY

Falcon Road Maintenance Equipment, Inc. (Falcon) warrants that the equipment is free from defects in material and workmanship under normal use for a period of one year from the date of delivery provided that no unauthorized modifications are made to the equipment.

Users of any fuel not meeting RW Beckett's published fuel specification requirements assume responsibility for all burner component failures. The burner will fail when using bio-diesel fuel exceeding B5 (i.e. B10, B30).

Failure to fully charge the battery prior to starting the equipment may cause diesel burner component failure that is not covered under the one-year warranty.

The following parts are examples of normal wear items and are exempt from warranty or have a limited warranty.

1) Tire wear is not warranted but defective tires are covered under this warranty
2) SRM24 batteries are warranted for 12 months from the "in-service" date
3) Burner system components (fuel filter, burner nozzle, CAD cell, burner gasket, coupler) are not warranted
4) Paint damage due to solvents and/or release agents used for cleaning.

Falcon will, at its option, repair or replace, any defective part returned during the one-year warranty period. Customer will be invoiced for any replacement parts. Falcon will issue a credit to the customer if parts are returned to Falcon within 30 days of submitting a warranty claim and deemed to be defective.

Limited onsite labor is included as part of the one-year warranty but it is ONLY with express written-consent of Falcon after all requested troubleshooting has been performed by the customer.

Shipping, and transportation costs to the local dealer, in connection with repair or replacement of defective parts, is the sole responsibility of the original purchaser.

This limited warranty does not apply, and no warranty, either expressed or implied, shall be applicable ---

a) to damages resulting from an accident, normal wear and tear, **unauthorized alteration,** misuse or abuse.
b) if the product is not operated and maintained according to written procedures in the Falcon Operator's Manual and/or the warning stickers.

In no event shall Falcon have any monetary liability to the original purchaser in excess of the price paid by the original purchaser for the product in question.

This warranty shall extend only to the original purchaser and is non-transferable.

Implied warranties including that of merchantability and fitness for a particular purpose are expressly limited in duration to the duration of this warranty. Falcon disclaims any liability for special, incidental or consequential damages.

No dealer, distributor or other representative of Falcon is authorized to change this warranty in any way or to grant any other warranty.

NOTICE: Any and all warning, safety and instructional labels affixed to the machine must not be removed or covered. Falcon RME agrees to replace warning, safety and instructional labels that become damaged or difficult to read, free of charge.

August 25, 2013

Inspection, Service and Preparation BEFORE EACH USE	
Item	**Inspection / Service**
Fill Diesel Fuel Tank / Cold Weather Fuel Considerations	Use diesel fuel recommended by diesel burner manufacturer (#1 and #2 diesel fuel and B5 bio-diesel fuel). Fill fuel tank daily or at the beginning of each shift and do not allow fuel tank to run out of fuel. When air temperature is below 40 degrees Fahrenheit, use fuel conditioner rated to -20 degrees Fahrenheit and mix per instructions on the label. **If fuel continues to gel in cold weather, mix diesel fuel 1:1 with kerosene and bring equipment inside to warm fuel before starting.** **WARNING: Only run diesel burner in a well-ventilated area.**
Set Tack Temperature & Ensure Battery Voltage is 12.8 volts	After flipping the TACK toggle switch on/up, set the controller temperature. If the burner does not ignite, within 30 seconds **AND** the temperature set on the controller is higher than the actual temperature displayed on the controller (meaning there is a need for heat), confirm battery is charged to 12.8 volts. A l**ow voltage battery causes component failure. Charge a low voltage battery before turning on diesel burner toggle switch.**
Breakaway Brakes • Electric	Check Operation and Connect Electric Breakaway.
Coupler and Hitch	Check for cracks, pits, and flats and Replace with ball and coupler having trailer GVW rating. Grease. Check locking device & replace when worn. Use hitch adjustment to tow trailer in a level fashion.
Safety Chains and Clevis Hooks	Check for wear and damage and replace if necessary. Cross under trailer hitch and confirm enough slack in chains to turn.
Tires	Check tire pressure when cold. Inflate to psi rating on side of tire.
Wheels - Lug Nuts & Wedges	Check for tightness and tighten if necessary. For new and remounted wheels, check torque after first 10, 25 and 50 miles of driving and after any impact. (see pg. 19 for torque pattern)
Fuel Filter	Empty any water from water separator reservoir in diesel fuel filter.
Lighting	Connect trailer plug to vehicle electrical receptacle and confirm that all lighting is operable and conforms to local regulations.
Latches and straps	Inspect latches and retention straps for wear and replace if necessary. Secure all latches before moving.
Detachable Equipment	Secure all equipment to trailer – propane torch, propane tank, vibratory roller, tools, hoses, et al. before moving the trailer. **FALCON RME is not responsible for accidents resulting from operator's failure to secure equipment to the trailer.**

Jack Stand (if applicable)	Raise jack stand before moving. **WARNING: Failure to raise the jack when trailer is in tow can cause the trailer to flip and cause serious injuries.**
Battery Charge Wiring	The trailer has battery-charging wires that can be connected to the tow vehicle by connecting the trailer plug to the tow vehicle receptacle. This will maintain a charge throughout the workday. Charging the battery overnight is required to increase the battery charge to the proper voltage required by the Beckett diesel burner (12.8 volts). The towing vehicle must have a 10-gauge supply line (RED) and a 10-gauge ground (BLACK) wired to the tow vehicle receptacle. When wired properly, connection to the tow vehicle will allow battery to maintain a charge…. not increase the charge level. Hook up to charger overnight.
Propane Hoses	Check for cracks and replace worn propane hoses. Ensure proper connection of propane to tank.

Inspection and Service Every Three Months	
Item	**Inspection / Service**
Tires	Inspect tread and sidewalls thoroughly. Replace tire when treads are worn, when sidewall has a bulge, or sidewall is worn.
Attaching Hardware	Inspect all fasteners, nuts and bolts and tighten as necessary.
Wheel Bearings	Grease with high temperature wheel bearing grease 6-10 pumps.

Inspection and Service Every Six Months	
Item	**Inspection / Service**
Jack stand gears	Remove cap on jack and pack gears with high-temperature grease.
Combustion Chamber	Inspect to ensure good combustion chamber gasket seal.
Fuel Filter	Replace fuel filter then follow these steps to bleed the burner pump. 1) turn diesel burner on 2) Slowly loosen the 3/8" bleeder screw on the diesel burner pump 3) Let fuel flow until a steady stream of diesel runs with no spurts of air. Burner Tune-up Kit - Falcon Part KT 31217
Diesel Burner Nozzles	Replace - Burner Tune-up Kit - Falcon Part KT 31217
CAD Cell	Replace - Burner Tune-up Kit - Falcon Part KT 31217
Burner Gasket	Replace - Burner Tune-up Kit - Falcon Part KT 31217

Inspection and Service Every 12 Months	
Item	**Inspection / Service**
Frame	Inspect all frame welds. Repair as needed.
Axles and Suspension	Inspect Hanger Welds. Repair as needed. Inspect worn or broken suspension parts and replace as needed.
Rims / Wheels	Inspect for cracks & dents. Replace as needed.
Wheel Bearings	Remove bearings from axles, clean thoroughly and reinstall with fresh grease.

LUBRICATION SCHEDULE

ITEM	FREQUENCY	LUBRICANT
Wheel Bearings	Every 3 months plus annually remove bearings from axles, clean thoroughly and reinstall with fresh grease.	Grease with high temperature wheel bearing grease 6-10 pumps
Jack stand gears	Every 6 months	Remove cap on jack and pack gears with high-temp grease.

WARNING

FAILURE TO FOLLOW THESE INSTRUCTIONS COULD CAUSE SERIOUS INJURY OR DEATH

HEATED TACK TANK

- ONLY USE EMULSIFIED TACK MATERIAL THAT WILL SPRAY BELOW 150° F.
- FOLLOW TACK MATERIAL MANUFACTURER'S OPERATING TEMPERATURE SPECIFICATIONS.
- DO NOT STORE UNUSED TACK IN TANK. WATER WILL EVAPORATE LEAVING UNDILUTED TACK THAT WILL BREAK PUMP COMPONENTS WHEN ATTEMPTING TO SPRAY. THIS DAMAGE IS NOT COVERED UNDER THE WARRANTY.
- NEVER RUN THE DIESEL BURNER WHEN TACK MATERIAL IS LOWER THAN 3" ABOVE THE FLUE. MONITOR TACK LEVEL THROUGHOUT THE DAY AND ADD TACK AS NEEDED.
- MONITOR THE TEMPERATURE OF TACK MATERIAL ON THE TACK TANK THERMOMETER THROUGHOUT THE DAY. REFER TO TACK MATERIAL TECHNICAL DATA SHEET FOR OPERATING TEMPERATURE SPECIFICATION.
- NEVER DO ANY MAINTENANCE WHILE THE BURNER IS RUNNING.
- NEVER EXCEED TOWING SPEED SET BY CITY, STATE AND FEDERAL LAWS.
- DO NOT ALLOW EXCESSIVE TACK TO BUILD UP ON TANK. THIS MATERIAL MAY ACCIDENTLY IGNITE.
- NEVER FILL FUEL OR TACK TANKS WHILE BURNER IS RUNNING.
- ALWAYS CHOCK TACK DISTRIBUTOR TIRES WHEN DISCONNECTED FROM TOW VEHICLE.
- REPLACE MISSING OR WORN WARNING AND OPERATING INSTRUCTION DECALS.
- KEEP ALL UNAUTHORIZED PERSONNEL AWAY FROM TACK DISTRIBUTOR.
- AUTHORIZED PERSONNEL SHOULD WEAR PROTECTIVE CLOTHING, GLASSES AND FOOTWEAR.
- ALWAYS USE A VEHICLE OF ADEQUATE SIZE WHEN TOWING A TACK DISTRIBUTOR. QUICK STOPS MAY NOT BE POSSIBLE WITH AN UNDERSIZED TOWING VEHICLE.
- NEVER LEAVE TACK DISTRIBUTOR UNATTENDED WHILE RUNNING.

FOR TECHNICAL ASSISTANCE CALL FALCON RME AT 989-495-9332.

F84

ATTACHING TRAILER TO TOW VEHICLE

1. Back tow vehicle hitch directly under the trailer coupling device.

2. Lower the trailer onto the tow vehicle by turning the jack handle in a counter-clockwise motion until the pintle eye rests on the coupler. Read and follow the receiver manufacturer's instructions to ensure that the trailer is properly secured to the towing vehicle. Secure the jack stand in the raised position before moving the tow vehicle. **WARNING: Failure to raise the jack when trailer is in tow can cause the trailer to flip and cause serious injuries.**

3. Attach the safety chains to the tow vehicle per federal, state and local regulations.

4. Attach the trailer breakaway cable to the tow vehicle per federal, state and local regulations.

5. Test breakaway cable for proper function before each use.

6. Plug in the trailer pigtail to the tow vehicle receptacle.

STARTING THE DIESEL BURNER AND SETTING THE TEMPERATURE CONTROLLER

DANGER: THE DIESEL BURNER SHOULD ONLY BE SERVICED BY AN AUTHORIZED SERVICE PERSON. SERIOUS INJURY OR DEATH COULD RESULT FROM IMPROPER SERVICING OF THE DIESEL BURNER. REFER TO THE END OF THIS MANUAL FOR DETAILED INFORMATION ON MAINTAINING THE BECKETT DIESEL BURNER.

DANGER: DO NOT ALLOW THE DIESEL BURNER TO RUN IN AN ENCLOSED AREA THAT IS NOT PROPERLY VENTILATED.

WARNING: WHEN MAINTAINING THE DIESEL BURNER, NEVER OPEN THE TRANSFORMER OF THE BURNER WHEN THE TACK TOGGLE SWITCH IN THE ON/UP POSITION OR OPERATOR COULD RECEIVE BURN INJURIES.

CAUTION: WEAR PROTECTIVE CLOTHING WHILE OPERATING THE EQUIPMENT. THE DIESEL BURNER WILL HEAT THE TACK MATERIAL TO THE TEMPERATURES SET BY THE OPERATOR.

NOTICE: INSTRUCTIONS ON SETTING THE TACK MATERIAL TEMPERATURE CONTROLLER: The controls to operate the tack distributor are inside the gray electrical enclosure near the front wall of the tack tank. Upon turning the TACK toggle switch on/up, the operator will see a digital display of the current tack temperature. By pressing the left gray scroll button, the digital display changes to the desired tack temperature. Consult MSDS for recommended tack material application temperature. The operator should confirm and change (if necessary) the application temperature on the controller before operating the equipment. To change the desired tack temperature, the operator holds the left gray scroll button down while pressing the up and down arrow keys until the desired temperature appears in the display area. Release left scroll button when the desired temperature appears in the display area. The desired tack temperature remains known to the automatic temperature controller, day after day, until it has been altered by an operator. The operator should not expect the burner to ignite when the desired temperature has been set to a temperature lower than the current tack temperature. A visual indication that the burner should be running is a green flashing light appearing in the upper left hand corner of the automatic temperature controller display.

NOTICE: The diesel burner will not ignite until there is a call for heat -- indicated by a green flashing light in the upper left-hand corner of the temperature controller display. After 30 seconds, if the diesel burner fails to light when there is a call for heat (green flashing light on), turn the TACK toggle switch OFF/DOWN and check the voltage on all batteries and charge to 12.8 volts. After checking and charging the battery, turn the TACK toggle switch on/up a second time and wait 30 seconds for the burner to ignite. If the burner still does not ignite call Falcon for technical support.

STARTING THE DIESEL BURNER AND SETTING THE TEMPERATURE CONTROLLER (CONTINUED)

NOTICE: Each time the TACK TANK toggle switch is turned ON/UP, diesel fuel is atomized into the diesel burner. While troubleshooting the burner, it is important to minimize the number of times the toggle switch is turned on and off. If the burner doesn't ignite after the second attempt call for technical support.

NOTICE: PREPARATION OF FUEL FOR COLD-WEATHER OPERATION.....
The viscosity of the diesel fuel changes as temperatures drop and can prohibit the burner from igniting as it was designed. The addition of a diesel fuel conditioner (added per instructions on the container) or mixing 1:1 with kerosene may provide some relief but when temperatures are very cold, the diesel fuel should be warmed before attempting to start the burner by bringing the trailer indoors. After fuel has warmed up, turn the TACK toggle switch ON/UP.

NOTICE: Use of bio-diesel fuel exceeding B5 will cause burner component failure and void the warranty on the burner.

NOTICE: The most common reasons for the diesel burner failing to light are 1) a low voltage battery and 2) gelled diesel fuel caused by cold weather. Attempting to operate the tack distributor with a low voltage battery or gelled diesel fuel will result in burner component failure.

1. Open the electrical enclosure box and turn the TACK toggle switch to the **ON/UP** position.

2. TEMPERATURE CONTROLLER / DIESEL BURNER INTERACTION

Set the automatic temperature controller by holding the left gray scroll button down while pressing the up and down arrow keys until the desired temperature appears in the display area. Release left scroll button.

STARTING THE DIESEL BURNER AND SETTING THE TEMPERATURE CONTROLLER (CONTINUED)

A small flashing light in the upper left-hand corner of the controller display area illuminates when the "set temperature" exceeds the temperature visible on the controller display. This green flashing light indicates that there is a call/need for heat. The burner should ignite within 30 seconds and run until the displayed temperature equals the "set temperature". When the "set temperature" is reached, the burner shuts off until the display area temperature drops 10 degrees at which time the burner will automatically ignite. The on and off cycling of the burner is by design.

If the green flashing light is not visible when the temperature displayed on the controller is lower than the "set temperature", there may be a problem with the controller. Contact Falcon at (989) 495-9332 for technical assistance.

If the green flashing light "call for heat" is on and the blower motor can be heard (but shuts down after 30 seconds), proceed to the next troubleshooting step #3 below.

If the green flashing light "call for heat" is on but the blower motor did not turn on for 30 seconds, check for secure wiring connections between the blower motor and the primary controller, then confirm the 30-amp fuse in the primary controller registers 12 volts. If the fuse is good, test for a faulty blower motor and replace if necessary. If a problem was detected and resolved, attempt to start the diesel burner by flipping the TACK toggle switch OFF/DOWN then ON/UP. If the burner still wont start after 30 seconds and it has been determined that the fuse is good and the blower motor is not faulty, confirm that the TACK toggle switch ON/UP ("call for heat" light should still be on) and check the silver wire on the relay (located inside the box housing the primary controller) to confirm the relay is receiving 12 volts. Check the red wire to the relay for 12 volts. If not 12 volts, check for faulty wire between the relay and battery. Check black wire for bad connection and ensure good ground on the relay. If all three wires on relay are good, check the red and white wire between the relay and the primary controller to ensure it has 12 volts. If 12 volts are not present on the red and white wire replace the relay. If the silver, red and red and white wires have 12 volts and a good ground is established, then check the primary controller and replace if faulty. After confirming all four wires on the relay are good and the primary is not faulty, attempt to start the burner by turning toggle switch OFF/DOWN then ON/UP and waiting 30 seconds to see if the burner ignites.

If after 30 seconds, the burner does not ignite when the green light is visible, turn the toggle switch down and up **ONCE** then wait 30 seconds to see if the burner lights. If the burner still fails to light after the second attempt of turning the TACK toggle swith ON/UP, contact technical support.

STARTING THE DIESEL BURNER AND SETTING THE TEMPERATURE CONTROLLER (CONTINUED)

3. TROUBLESHOOTING

a) Check the diesel burner CAD cell to confirm the eye is clean. To clean the CAD cell, wipe the eye with a clean cloth or a cotton swab. If the CAD cell eye was dirty, attempt to start the burner by turning the TACK toggle switch off/down and on/up and waiting 30 seconds to see if cleaning the CAD cell allows the burner to ignite. The CAD cell should be replaced semi-annually. If the eye was clean, proceed to the next troubleshooting step.

b) **NOTICE: When working on the diesel burner fuel pump never change the factory setting.**

Confirm the diesel burner is getting fuel by loosening the bleeder screw located at the base of the fuel pump. Capture a fuel sample in a clear glass container. Allow the sample to sit at room temperature for 10 minutes. Regardless of the color, it should be clear -- not cloudy. Cloudy fuel should be drained from the fuel tank and replaced with a good, known #1 or #2 diesel fuel (or a combination of kerosene and #1 or #2 diesel fuel mixed at a ratio of 1:1 in cold weather conditions). Poor quality fuel can prevent the burner from running properly and **CAUSE BURNER COMPONENT FAILURE**. Clues that fuel is not within the ASTM specs might be a sudden rash of problems: delayed ignition, smoky fires, appliance sooting and noisy, dirty flames. If fuel was found to be bad or bio-diesel fuel exceeding B5 was used, attempt to start burner with good diesel fuel.

NOTICE: The fuel filter is equipped with a water separator that should be emptied whenever water is visible. The fuel filter should be replaced semi-annually.

If there is not a steady stream of fuel, tighten the bleeder screw and check the following.....

1) Make sure the fuel filter it not plugged or frozen by opening the valve at the base of the fuel filter and confirming liquid flows from the filter. Replace the fuel filter if liquid does not flow when opening the fuel filter valve.

2) Inspect the coupler in the burner to make sure that the motor is coupled to the fuel pump. If it is not, replace the coupler.

Remove bleeder screw again and look for a steady stream of fuel. If found, attempt to start burner by turning TACK toggle switch OFF/DOWN then ON/UP and waiting 30 seconds for burner to ignite. If the burner does not ignite continue to the next troubleshooting step.

STARTING DIESEL BURNER AND SETTING THE TEMPERATURE CONTROLLER (CONTINUED)

c) **NOTE: Whenever checking the burner nozzle, inspect the electrode tip settings and replace electrodes if the tips are rounded.** The burner nozzle may be fully or partially plugged preventing the diesel burner from igniting. The nozzle should be changed semi-annually or after 500 hours of use -- whichever comes first. To check for a clogged nozzle, adjust the **outer air shutter (see Beckett burner manual)** on the diesel burner to the number 1 (the lowest setting), turn the TACK toggle switch off/down and on/up, then **slowly** move the outer air shutter from a position of 1 to 4 as the blower motor is running for 30 seconds to see if the air shutter adjustment helps the burner ignite. If the burner ignites with the outer air shutter is at a point less than a setting of "4", the nozzle needs to be replaced. Turn off/down the TACK toggle switch, return the outer air shutter to the factory setting of 4 and install new burner nozzle being careful not to touch the mesh screen. Oils from hands may plug the nozzle. After changing the nozzle, turn the TACK toggle switch off/down and on/up and wait 30 seconds for burner to light. NOTE: Cleaning the nozzle may be a temporary fix until a new nozzle can be installed. The burner will not function properly with the outer air shutter set too low on a permanent basis. If the burner still does not ignite, proceed to the next step.

d) Turn tack switch off/down. Clean the blower wheel, air inlet, air guide and retention head of any dirt, asphalt or other material. Inspect igniter spring contacts and clean or replace if corroded. Turn tack switch on/up and attempt to ignite diesel burner.

If burner still does not light, contact Falcon at (989) 495-9332.

TACK DISTRIBUTOR OPERATING INSTRUCTIONS ON NEXT PAGE

NOTE: Remove unused tack material from the tack tank at the end of each workday. The tank is not designed to be a storage reservoir and must be emptied at the end of a workday.

WARNING: TACK MATERIAL MAY BE HOT. ALLOW MATERIAL TO COOL AND WEAR PROTECTIVE GEAR BEFORE REMOVING ANY TACK.

TACK TANK & RELEASE AGENT SPRAY SYSTEM (single-direction flow)

DANGER: FILL HONDA MOTOR FUEL TANK 10 MINUTES PRIOR TO STARTING HEATED TACK TANK AND NEVER FILL HONDA FUEL TANK WHEN THE TACK TANK IS WARM

ENSURE BATTERY IS FULLY CHARGED TO 12.8 VOLTS BEFORE STARTING TO PREVENT BURNER DAMAGE

CLOSE ALL BALL VALVES PRIOR TO STARTING HONDA ENGINE (LOCATED NEXT TO MATERIAL SELECTOR VALVE AND ON SPRAY WAND). BALL VALVE HANDLE SHOULD BE PERPENDICULAR TO THE HOSE. FAILURE TO DO SO WILL CAUSE HOT MATERIAL TO SPRAY OUT OF THE SPRAY WAND THAT COULD CAUSE SERIOUS INJURY

CHECK TACK MATERIAL LEVEL PERIODICALLY; ADD MORE TACK IF LEVEL IS LESS THAN 3" ABOVE THE FLUE

MONITOR THE TACK MATERIAL TEMPERATURE ON THE THERMOMETER LOCATED ON TOP OF THE TACK TANK. DO NOT EXCEED MATERIAL TEMPERATURE RECOMMENDED BY MATERIAL MANUFACTURER

STARTING:

1. MIX TACK MATERIAL WITH WATER BASED ON RECOMMENDATIONS OF MANUFACTURER AND FILL TACK TANK LEAVING 4" BELOW THE FILL NECK ALLOWING TACK ROOM TO EXPAND. ENSURE TACK MIXTURE HAS THE VISCOSITY OF WATER.
2. FILL FLUSH TANK WITH ENVIRONMENTALLY FRIENDLY, NON-FLAMMABLE RELEASE AGENT.
3. IF TACK TANK IS HEATED, FLIP THE TACK TOGGLE SWITCH TO THE UP POSITION, SET THE TACK TANK TEMPERATURE CONTROLLER TO THE TEMPERATURE RECOMMENDED BY THE TACK MATERIAL MANUFACTURER AND ALLOW TACK TO HEAT TO THE DESIRED TEMPERATURE BEFORE CONTINUING.
4. MOVE THE ROUND MATERIAL SELECTOR VALVE KNOB TO THE UP POSITION (RELEASE AGENT)
5. STARTING HONDA ENGINE
   - CHECK ENGINE OIL DIP STICK AND FILL IF NECESSARY
   - MOVE BLACK FUEL VALVE LEVER TO THE ON POSITION (TOWARD HONDA ENGINE)
   - MOVE GRAY CHOKE SWITCH TO CLOSED POSITION (OPPOSITE OF BLACK FUEL VALVE)
   - MOVE RED ENGINE SWITCH TO ON POSITION
   - START ENGINE WITH PULL START
   - ONCE ENGINE IS WARM, SHUT OFF CHOKE (MOVE GRAY SWITCH TOWARD MOTOR)
   - ADJUST THROTTLE TO MAX POSITION (NOTE PICTURE OF RABBIT)
   - RUN FOR 10 MINUTES TO CLEAN OUT SYSTEM BY CIRCULATING RELEASE AGENT THROUGH PUMP & VALVES
6. SPRAYING TACK MATERIAL
   - MOVE ROUND MATERIAL SELECTOR KNOB TO DOWN POSITION (TACK)
   - WAIT FOR 10 MINUTES TO ALLOW MATERIAL TO CIRCULATE & BLEND
   - OPEN BALL VALVE LOCATED NEXT TO MATERIAL SELECTOR VALVE.
   - REMOVE SPRAY WAND FROM HOLDER
   - PIVOT BALL VALVE ON SPRAY WAND TO SPRAY AND STOP SPRAYING AS NEEDED

STOPPING:

1. MOVE SPRAY WAND BALL VALVE TO THE CLOSED POSITION (90 DEGREES TO HOSE)
2. MOVE ROUND MATERIAL SELECTOR VALVE KNOB TO THE UP POSITION (RELEASE AGENT)
3. IF TACK TANK IS HEATED FLIP THE TACK DIESEL BURNER TOGGLE SWITCH DOWN/OFF
4. WAIT 10 MINUTES FOR RELEASE AGENT TO CIRCULATE THROUGH SYSTEM
5. MOVE SPRAY WAND BALL VALVE TO THE OPEN POSITION (PARALLEL TO HOSE)
6. SPRAY EXCESS RELEASE AGENT INTO CATCH BUCKET UNTIL RELEASE AGENT BECOMES CLEAR
7. MOVE SPRAY WAND BALL VALVE TO THE CLOSED POSITION (90 DEGREES TO HOSE)
8. RETURN SPRAY WAND TO HOLDER ENSURING SPRAY WAND AND HOSE ARE SECURE
9. MOVE BALL VALVE LOCATED NEXT TO MATERIAL SELECTOR VALVE TO CLOSED POSITION
10. MOVE RED HONDA ENGINE SWITCH TO (OFF) POSITION
11. MOVE FUEL VALVE LEVER TO THE (OFF) POSITION AWAY FROM HONDA MOTOR
12. MOVE THROTTLE ON HONDA MOTOR TO MINIMUM (NOTE PICTURE OF TURTLE)
13. EMPTY TACK TANK MATERIAL AT THE END OF THE WORKDAY

REPLACEMENT PARTS AND NUMBERS

Item Description	Falcon Part Number
Beckett Burner (Main Burner FAL 101)	FS10072
Burner Nozzle (.75)	FS10075
Igniter Assembly for diesel burner	FS10322
Motor	FS10323
Primary Burner Control	FS10331
Fuel Unit Pump	FS10324
Solenoid Valve	FS10701
Cad Cell	FS10333
Pump/Motor Coupling	FS10703
Burner Gasket	FS31154
Blower Wheel	FS11514
Starter Kit	FS11515
Electrode Tips for Diesel Burner	FS11528
Nozzle Line Assembly w/ Electrodes, Diesel	FS11529
Z-Gauge, Diesel Burner Igniter Alignment Tool	FS32754
Retention Head, F3	FS11636
Air Tube Combination	FS32015
Replacement Fuel Filter, Standard	FS10705
Fuel Filter	FS10246
Fuel Line	FS10241
Fuel Tank Ball Valve	FS10061
Fuel Cap, Lockable, Vented	FS31151
Combustion Chamber w/ insert	HT32269
Electrical Enclosure (8x8x6)	EL10203
Electrical Enclosure (8x10x6)	EL11695
Temperature/Process Controller (digital)	EL10133
Thermocouple 36"	EL10184
Thermocouple 24"	EL10325
Thermocouple 18"	EL11714
12-Volt Relay	EL10031
Battery Box (SRM 24)	EL10217
Battery Lug, Copper	EL10028
Electric Breakaway	EL11521
Male Receptacle	EL11513
Junction Box (Breakers)	EL11517
20 Amp Breakers	EL11518
30 Amp Breakers	EL11519
12-Volt Toggle Switch	EL10038

REPLACEMENT PARTS AND NUMBERS
(CONTINUED)

Item Description	Falcon Part Number
Loading Door Handle Grips	DO10144
Material Door Pin (Handle)	DO32171
3/8" Midlink	TR10117
3/8" Grab Hook	TR10101
Lanyard and Pin (for Loading Doors)	DO10145
Propane Torch	PR11744
Marine Grade Battery Charger (Single Bank)	EL31024
Tack Tank Molasses Valve 1.5"	OP11640
Male Receptacle	OP11513
50/550 Tack Tank Thermometer	HT11642
Diesel Burner Tune-up Kit/no preheater	KT31217
Environmentally-Friendly Release Agent	FL32144
Asphalt Recycling Rejuvenator	FL31307
Solar Breakaway Charger	OP32791
Fire Extinguisher Bracket 5LB	OP11738
Fire Extinguisher Bracket 10LB	OP11742
Marker Light LED Amber	LI11682
Marker Light LED Red	LI11683
Grommet 4" Round	LI11685
Strobe Light 4" Round	LI11677
Stop/Tail/Turn 4" LED Round	LI32810
ID Bar	LI10692
Spray System coupling, half, KYWY, ¾”	OP12091
Spray System, Insert, nitrile, L090/095	OP13119
Spray System Pump (For water-based systems)	OP31016
Tire Assembly, 16” mounted on 8-bolt wheel	SU32021
16” Tire (ST235/80 R16)	SU11568
Wheel 6” x 16”	SU11567

BATTERY CHARGING INSTRUCTIONS

The tack distributor is equipped with an on-board battery charger and male receptacle. Connect a heavy-duty UL-approved extension cord to the trailer's male receptacle before plugging the male end of the extension cord into a 120VAC building ground fault circuit interrupt outlet. The tack distributor battery is hard-wired to the on-board battery charger and will be charged at the same time.

WIRING COLOR CODE

WARNING: REWIRING THE TACK DISTRIBUTOR IMPROPERLY MAY CAUSE COMPONENT FAILURE.

NOTICE: REWIRING THE EQUIPMENT WITHOUT PRIOR AUTHORIZATION VOIDS THE WARRANTY.

STROBE / WARNING LIGHT	Orange
RUNNING	Brown
FUEL SENDING UNIT (option)	Violet
ELECTRIC BRAKES	Blue
LEFT TURN	Yellow
RIGHT TURN	Green
BURNER COMMAND WIRE	Silver
POSITIVE	Red
GROUND	Black

Tire Safety Information

This portion of the User's Manual contains tire safety information as required by 49 CFR 575.6.

Section 2.1 contains "Steps for Determining Correct Load Limit - Trailer".

Section 2.2 contains "Steps for Determining Correct Load Limit – Tow Vehicle".

Section 2.3 contains a Glossary of Tire Terminology, including "cold inflation pressure", "maximum inflation pressure", "recommended inflation pressure", and other non-technical terms.

Section 2.4 contains information from the NHTSA brochure entitled "Tire Safety – Everything Rides On It".
This brochure This brochure, as well as the preceding subsections, describes the following items;

- Tire labeling, including a description and explanation of each marking on the tires, and information about the DOT Tire Identification Number (TIN).
- Recommended tire inflation pressure, including a description and explanation of:
  - A. Cold inflation pressure.
  - B. Vehicle Placard and location on the vehicle.
  - C. Adverse safety consequences of under inflation (including tire failure).
  - D. Measuring and adjusting air pressure for proper inflation.
- Tire Care, including maintenance and safety practices.
- Vehicle load limits, including a description and explanation of the following items:
  - A. Locating and understanding the load limit information, total load capacity, and cargo capacity.
  - B. Calculating total and cargo capacities with varying seating configurations including quantitative examples showing / illustrating how the vehicles cargo and luggage capacity decreases as combined number and size of occupants' increases. This item is also discussed in Section 3.
  - C. Determining compatibility of tire and vehicle load capabilities.
  - D. Adverse safety consequences of overloading on handling and stopping on tires.

1.1. Steps for Determining Correct Load Limit – Trailer

Determining the load limits of a trailer includes more than understanding the load limits of the tires alone. On all trailers there is a Federal certification/VIN label that is located on the forward half of the left (road) side of the unit. This certification/VIN label will indicate the trailer's Gross Vehicle Weight Rating (GVWR). This is the most weight the fully loaded trailer can weigh. It will also provide the Gross Axle Weight Rating (GAWR). This is the most a particular axle can weigh. If there are multiple axles, the GAWR of each axle will be provided.

If your trailer has a GVWR of 10,000 pounds or less, there is a vehicle placard located in the same location as the certification label described above. This placard provides tire and loading information. In addition, this placard will show a statement regarding maximum cargo capacity. Cargo can be added to the trailer, up to the maximum weight specified on the placard. The combined weight of the cargo is provided as a single number. In any case, remember: the total weight of a fully loaded trailer can not exceed the stated GVWR.

For trailers with living quarters installed, the weight of water and propane also need to be considered. The weight of fully filled propane containers is considered part of the weight of the trailer before it is loaded with cargo, and is not considered part of the disposable cargo load. Water however, is a disposable cargo weight and is treated as such. If there is a fresh water storage tank of 100 gallons, this tank when filled would weigh about 800 pounds. If more cargo is being transported, water can be off-loaded to keep the total amount of cargo added to the vehicle within the limits of the GVWR so as not to overload the vehicle. Understanding this flexibility will allow you, the owner, to make choices that fit your travel needs.

When loading your cargo, be sure it is distributed evenly to prevent overloading front to back and side to side. Heavy items should be placed low and as close to the axle positions as reasonable. Too many items on one side may overload a tire. The best way to know the actual weight of the vehicle is to weigh it at a public scale. Talk to your dealer to discuss the weighing methods needed to capture the various weights related to the trailer. This would include the weight empty or unloaded, weights per axle, wheel, hitch or king-pin, and total weight.

Excessive loads and/or underinflation cause tire overloading and, as a result, abnormal tire flexing occurs. This situation can generate an excessive amount of heat within the tire. Excessive heat may lead to tire failure. It is the air pressure that enables a tire

to support the load, so proper inflation is critical. The proper air pressure may be found on the certification/VIN label and/or on the Tire Placard. This value should never exceed the maximum cold inflation pressure stamped on the tire.

1.1.1. Trailers 10,000 Pounds GVWR or Less

Tire and Loading Information Placard – Figure 1-1

1. Locate the statement, "The weight of cargo should never exceed XXX kg or XXX lbs.," on your vehicle placard. See figure 1-1.
2. This figure equals the available amount of cargo and luggage load capacity.
3. Determine the combined weight of luggage and cargo being loaded on the vehicle. That weight may safely exceed the available cargo and luggage load capacity.

The trailer's placard refers to the Tire Information Placard attached adjacent to or near the trailer's VIN (Certification) label at the left front of the trailer.

1.1.2. Trailers Over 10,000 Pounds GVWR (Note: These trailers are not required to have a tire information placard on the vehicle)

1. Determine the empty weight of your trailer by weighing the trailer using a public scale or other means. This step does not have to be repeated.
2. Locate the GVWR (Gross Vehicle Weight Rating) of the trailer on your trailer's VIN (Certification) label.
3. Subtract the empty weight of your trailer from the GVWR stated on the VIN label. That weight is the maximum available cargo capacity of the trailer and may not be safely exceeded.

1.2. Steps for Determining Correct Load Limit – Tow Vehicle

1. Locate the statement, "The combined weight of occupants and cargo should never exceed XXX lbs.," on your vehicle's placard.
2. Determine the combined weight of the driver and passengers who will be riding in your vehicle.
3. Subtract the combined weight of the driver and passengers from XXX kilograms or XXX pounds.
4. The resulting figure equals the available amount of cargo and luggage capacity. For example, if the "XXX" amount equals 1400 lbs. and there will be five 150 lb. passengers in your vehicle, the amount of available cargo and luggage capacity is 650 lbs. (1400-750 (5 x 150) = 650 lbs.).
5. Determine the combined weight of luggage and cargo being loaded on the vehicle. That weight may not safely exceed the available cargo and luggage capacity calculated in Step # 4.
6. If your vehicle will be towing a trailer, load from your trailer will be transferred to your vehicle. Consult the tow vehicle's manual to determine how this weight transfer reduces the available cargo and luggage capacity of your vehicle.

1.3. Glossary Of Tire Terminology

Accessory weight

The combined weight (in excess of those standard items which may be replaced) of automatic transmission, power steering, power brakes, power windows, power seats, radio and heater, to the extent that these items are available as factory-installed equipment (whether installed or not).

Bead
The part of the tire that is made of steel wires, wrapped or reinforced by ply cords and that is shaped to fit the rim.

Bead separation
This is the breakdown of the bond between components in the bead.

Bias ply tire
A pneumatic tire in which the ply cords that extend to the beads are laid at alternate angles substantially less than 90

degrees to the centerline of the tread.

Carcass
The tire structure, except tread and sidewall rubber which, when inflated, bears the load.

Chunking
The breaking away of pieces of the tread or sidewall.

Cold inflation pressure
The pressure in the tire before you drive.

Cord
The strands forming the plies in the tire.

Cord separation
The parting of cords from adjacent rubber compounds.

Cracking
Any parting within the tread, sidewall, or inner liner of the tire extending to cord material.

CT
A pneumatic tire with an inverted flange tire and rim system in which the rim is designed with rim flanges pointed radially inward and the tire is designed to fit on the underside of the rim in a manner that encloses the rim flanges inside the air cavity of the tire.

Curb weight
The weight of a motor vehicle with standard equipment including the maximum capacity of fuel, oil, and coolant, and, if so equipped, air conditioning and additional weight optional engine.

Extra load tire
A tire designed to operate at higher loads and at higher inflation pressures than the corresponding standard tire.

Groove
The space between two adjacent tread ribs.

Gross Axle Weight Rating
The maximum weight that any axle can support, as published on the Certification / VIN label on the front left side of the trailer. Actual weight determined by weighing each axle on a public scale, with the trailer attached to the towing vehicle.

Gross Vehicle Weight Rating
The maximum weight of the fully loaded trailer, as published on the Certification / VIN label. Actual weight determined by weighing trailer on a public scale, without being attached to the towing vehicle.

Hitch Weight
The downward force exerted on the hitch ball by the trailer coupler.

Innerliner
The layer(s) forming the inside surface of a tubeless tire that contains the inflating medium within the tire.

Innerliner separation
The parting of the innerliner from cord material in the carcass.

Intended outboard sidewall
The sidewall that contains a white-wall, bears white lettering or bears manufacturer, brand, and/or model name molding that is higher or deeper than the same molding on the other sidewall of the tire or the outward facing sidewall of an asymmetrical tire that has a particular side that must always face outward when mounted on a vehicle.

Light truck (LT) tire
A tire designated by its manufacturer as primarily intended for use on lightweight trucks or multipurpose passenger vehicles.

Load rating
The maximum load that a tire is rated to carry for a given inflation pressure.

Maximum load rating
The load rating for a tire at the maximum permissible inflation pressure for that tire.

Maximum permissible inflation pressure
The maximum cold inflation pressure to which a tire may be inflated.

Maximum loaded vehicle weight
The sum of curb weight, accessory weight, vehicle capacity weight, and production options weight.

Measuring rim
The rim on which a tire is fitted for physical dimension requirements.

Pin Weight
The downward force applied to the 5th wheel or gooseneck ball, by the trailer kingpin or gooseneck coupler.

Non-pneumatic rim
A mechanical device which, when a non-pneumatic tire assembly incorporates a wheel, supports the tire, and attaches, either integrally or separably, to the wheel center member and upon which the tire is attached.

Non-pneumatic spare tire assembly
A non-pneumatic tire assembly intended for temporary use in place of one of the pneumatic tires and rims that are fitted to a passenger car in compliance with the requirements of this standard.

Non-pneumatic tire
A mechanical device which transmits, either directly or through a wheel or wheel center member, the vertical load and tractive forces from the roadway to the vehicle, generates the tractive forces that provide the directional control of the vehicle and does not rely on the containment of any gas or fluid for providing those functions.

Non-pneumatic tire assembly
A non-pneumatic tire, alone or in combination with a wheel or wheel center member, which can be mounted on a vehicle.

Normal occupant weight
This means 68 kilograms (150 lbs.) times the number of occupants specified in the second column of Table I of 49 CFR 571.110.

Occupant distribution
The distribution of occupants in a vehicle as specified in the third column of Table I of 49 CFR 571.110.

Open splice
Any parting at any junction of tread, sidewall, or innerliner that extends to cord material.

Outer diameter
The overall diameter of an inflated new tire.

Overall width
The linear distance between the exteriors of the sidewalls of an inflated tire, including elevations due to labeling, decorations, or protective bands or ribs.

Ply

A layer of rubber-coated parallel cords.

Ply separation
A parting of rubber compound between adjacent plies.

Pneumatic tire
A mechanical device made of rubber, chemicals, fabric and steel or other materials, that, when mounted on an automotive wheel, provides the traction and contains the gas or fluid that sustains the load.

Production options weight
The combined weight of those installed regular production options weighing over 2.3 kilograms (5 lbs.) in excess of those standard items which they replace, not previously considered in curb weight or accessory weight, including heavy duty brakes, ride levelers, roof rack, heavy duty battery, and special trim.

Radial ply tire
A pneumatic tire in which the ply cords that extend to the beads are laid at substantially 90 degrees to the centerline of the tread.

Recommended inflation pressure
This is the inflation pressure provided by the vehicle manufacturer on the Tire Information label and on the Certification / VIN tag.

Reinforced tire
A tire designed to operate at higher loads and at higher inflation pressures than the corresponding standard tire.

Rim
A metal support for a tire or a tire and tube assembly upon which the tire beads are seated.

Rim diameter
This means the nominal diameter of the bead seat.
Rim size designation
This means the rim diameter and width.

Rim type designation
This means the industry of manufacturer's designation for a rim by style or code.

Rim width
This means the nominal distance between rim flanges.

Section width
The linear distance between the exteriors of the sidewalls of an inflated tire, excluding elevations due to labeling, decoration, or protective bands.

Sidewall
That portion of a tire between the tread and bead.

Sidewall separation
The parting of the rubber compound from the cord material in the sidewall.

Special Trailer (ST) tire The "ST" is an indication the tire is for trailer use only.

Test rim
The rim on which a tire is fitted for testing, and may be any rim listed as appropriate for use with that tire.

Tread
That portion of a tire that comes into contact with the road.

Tread rib
A tread section running circumferentially around a tire.

Tread separation
Pulling away of the tread from the tire carcass.

Treadwear indicators (TWI)
The projections within the principal grooves designed to give a visual indication of the degrees of wear of the tread.

Vehicle capacity weight
The rated cargo and luggage load plus 68 kilograms (150 lbs.) times the vehicle's designated seating capacity.

Vehicle maximum load on the tire
The load on an individual tire that is determined by distributing to each axle its share of the maximum loaded vehicle weight and dividing by two.

Vehicle normal load on the tire
The load on an individual tire that is determined by distributing to each axle its share of the curb weight, accessory weight, and normal occupant weight (distributed in accordance with Table I of CRF 49 571.110) and dividing by 2.

Weather side
The surface area of the rim not covered by the inflated tire.

Wheel center member
In the case of a non-pneumatic tire assembly incorporating a wheel, a mechanical device which attaches, either integrally or separably, to the non-pneumatic rim and provides the connection between the non-pneumatic rim and the vehicle; or, in the case of a non-pneumatic tire assembly not incorporating a wheel, a mechanical device which attaches, either integrally or separably, to the non-pneumatic tire and provides the connection between tire and the vehicle.

Wheel-holding fixture
The fixture used to hold the wheel and tire assembly securely during testing.

1.4. Tire Safety - Everything Rides On It

The National Traffic Safety Administration (NHTSA) has published a brochure (DOT HS 809 361) that discusses all aspects of Tire Safety, as required by CFR 575.6. This brochure is reproduced in part below. It can be obtained and downloaded from NHTSA, free of charge, from the following web site:

<www.nhtsa.dot.gov/cars/rules/TireSafety/ridesonit/tires_index.html>

Studies of tire safety show that maintaining proper tire pressure, observing tire and vehicle load limits (not carrying more weight in your vehicle than your tires or vehicle can safely handle), avoiding road hazards, and inspecting tires for cuts, slashes, and other irregularities are the most important things you can do to avoid tire failure, such as tread separation or blowout and flat tires. These actions, along with other care and maintenance activities, can also:

- Improve vehicle handling
- Help protect you and others from avoidable breakdowns and accidents
- Improve fuel economy
- Increase the life of your tires.

This booklet presents a comprehensive overview of tire safety, including information on the following topics:
- Basic tire maintenance
- Uniform Tire Quality Grading System
- Fundamental characteristics of tires
- Tire safety tips.

Use this information to make tire safety a regular part of your vehicle maintenance routine. Recognize that the time you spend is minimal compared with the inconvenience and safety consequences of a flat tire or other tire failure.

1.5. Safety First–Basic Tire Maintenance

Properly maintained tires improve the steering, stopping, traction, and load-carrying capability of your vehicle.

Underinflated tires and overloaded vehicles are a major cause of tire failure. Therefore, as mentioned above, to avoid flat tires and other types of tire failure, you should maintain proper tire pressure, observe tire and vehicle load limits, avoid road hazards, and regularly inspect your tires.

1.5.1. Finding Your Vehicle's Recommended Tire Pressure and Load Limits

Tire information placards and vehicle certification labels contain information on tires and load limits. These labels indicate the vehicle manufacturer's information including:

• Recommended tire size
• Recommended tire inflation pressure
• Vehicle capacity weight (VCW–the maximum occupant and cargo weight a vehicle is designed to carry)
• Front and rear gross axle weight ratings (GAWR– the maximum weight the axle systems are designed to carry).

Both placards and certification labels are permanently attached to the trailer near the left front.

1.5.2. Understanding Tire Pressure and Load Limits

Tire inflation pressure is the level of air in the tire that provides it with load-carrying capacity and affects the overall performance of the vehicle. The tire inflation pressure is a number that indicates the amount of air pressure– measured in pounds per square inch (psi)–a tire requires to be properly inflated. (You will also find this number on the vehicle information placard expressed in kilopascals (kpa), which is the metric measure used internationally.)

Manufacturers of passenger vehicles and light trucks determine this number based on the vehicle's design load limit, that is, the greatest amount of weight a vehicle can safely carry and the vehicle's tire size. The proper tire pressure for your vehicle is referred to as the "recommended cold inflation pressure." (As you will read below, it is difficult to obtain the recommended tire pressure if your tires are not cold.)
Because tires are designed to be used on more than one type of vehicle, tire manufacturers list the "maximum permissible inflation pressure" on the tire sidewall. This number is the greatest amount of air pressure that should ever be put in the tire under normal driving conditions.

1.5.3. Checking Tire Pressure

It is important to check your vehicle's tire pressure at least once a month for the following reasons:

• Most tires may naturally lose air over time.
• Tires can lose air suddenly if you drive over a pothole or other object or if you strike the curb when parking.
• With radial tires, it is usually not possible to determine underinflation by visual inspection.

For convenience, purchase a tire pressure gauge to keep in your vehicle. Gauges can be purchased at tire dealerships, auto supply stores, and other retail outlets.
The recommended tire inflation pressure that vehicle manufacturers provide reflects the proper psi when a tire is cold. The term cold does not relate to the outside temperature. Rather, a cold tire is one that has not been driven on for at least three hours. When you drive, your tires get warmer, causing the air pressure within them to increase. Therefore, to get an accurate tire pressure reading, you must measure tire pressure when the tires are cold or compensate for the extra pressure in warm tires.

1.5.4. Steps for Maintaining Proper Tire Pressure

- Step 1: Locate the recommended tire pressure on the vehicle's tire information placard, certification label, or in the owner's manual.
- Step 2: Record the tire pressure of all tires.
- Step 3: If the tire pressure is too high in any of the tires, slowly release air by gently pressing on the tire valve stem with the edge of your tire gauge until you get to the correct pressure.
- Step 4: If the tire pressure is too low, note the difference between the measured tire pressure and the correct tire pressure. These "missing" pounds of pressure are what you will need to add.
- Step 5: At a service station, add the missing pounds of air pressure to each tire that is underinflated.
- Step 6: Check all the tires to make sure they have the same air pressure (except in cases in which the front and rear tires are supposed to have different amounts of pressure).

If you have been driving your vehicle and think that a tire is underinflated, fill it to the recommended cold inflation pressure indicated on your vehicle's tire information placard or certification label. While your tire may still be slightly underinflated due to the extra pounds of pressure in the warm tire, it is safer to drive with air pressure that is slightly lower than the vehicle manufacturer's recommended cold inflation pressure than to drive with a significantly underinflated tire. Since this is a temporary fix, don't forget to recheck and adjust the tire's pressure when you can obtain a cold reading.

1.5.5. Tire Size

To maintain tire safety, purchase new tires that are the same size as the vehicle's original tires or another size recommended by the manufacturer. Look at the tire information placard, the owner's manual, or the sidewall of the tire you are replacing to find this information. If you have any doubt about the correct size to choose, consult with the tire dealer.

1.5.6. Tire Tread

The tire tread provides the gripping action and traction that prevent your vehicle from slipping or sliding, especially when the road is wet or icy. In general, tires are not safe and should be replaced when the tread is worn down to 1/16 of an inch. Tires have built-in treadwear indicators that let you know when it is time to replace your tires. These indicators are raised sections spaced intermittently in the bottom of the tread grooves. When they appear "even" with the outside of the tread, it is time to replace your tires. Another method for checking tread depth is to place a penny in the tread with Lincoln's head upside down and facing you. If you can see the top of Lincoln's head, you are ready for new tires.

1.5.7. Tire Balance and Wheel Alignment

To avoid vibration or shaking of the vehicle when a tire rotates, the tire must be properly balanced. This balance is achieved by positioning weights on the wheel to counterbalance heavy spots on the wheel-and-tire assembly. A wheel alignment adjusts the angles of the wheels so that they are positioned correctly relative to the vehicle's frame. This adjustment maximizes the life of your tires. These adjustments require special equipment and should be performed by a qualified technician.

1.5.8. Tire Repair

The proper repair of a punctured tire requires a plug for the hole and a patch for the area inside the tire that surrounds the puncture hole. Punctures through the tread can be repaired if they are not too large, but punctures to the sidewall should not be repaired. Tires must be removed from the rim to be properly inspected before being plugged and patched.

1.5.9. Tire Fundamentals

Federal law requires tire manufacturers to place standardized information on the sidewall of all tires. This information identifies and describes the fundamental characteristics of the tire and also provides a tire identification number for safety standard certification and in case of a recall.

1.5.9.1. _Information on Passenger Vehicle Tires

Please refer to the diagram below.

P The "P" indicates the tire is for passenger vehicles.

Next number This three-digit number gives the width in millimeters of the tire from sidewall edge to sidewall edge. In general, the larger the number, the wider the tire.

Next number This two-digit number, known as the aspect ratio, gives the tire's ratio of height to width. Numbers of 70 or lower indicate a short sidewall for improved steering response and better overall handling on dry pavement.

R The "R" stands for radial. Radial ply construction of tires has been the industry standard for the past 20 years.

Next number This two-digit number is the wheel or rim diameter in inches. If you change your wheel size, you will have to purchase new tires to match the new wheel diameter.

Next number This two- or three-digit number is the tire's load index. It is a measurement of how much weight each tire can support. You may find this information in your owner's manual. If not, contact a local tire dealer. Note: You may not find this information on all tires because it is not required by law.

M+S The "M+S" or "M/S" indicates that the tire has some mud and snow capability. Most radial tires have these markings; hence, they have some mud and snow capability.

Speed Rating The speed rating denotes the speed at which a tire is designed to be driven for extended periods of time. The ratings range from 99 miles per hour (mph) to 186 mph. These ratings are listed below. Note: You may not find this information on all tires because it is not required by law.

* For tires with a maximum speed capability over 149 mph, tire manufacturers sometimes use the letters ZR. For those with a maximum speed capability over 186 mph, tire manufacturers always use the letters ZR.

U.S. DOT Tire Identification Number This begins with the letters "DOT" and indicates that the tire meets all federal standards. The next two numbers or letters are the plant code where it was manufactured, and the last four numbers represent the week and year the tire was built. For example, the numbers 3197 means the 31st week of 1997. The other numbers are marketing codes used at the manufacturer's discretion. This information is used to contact consumers if a tire defect requires a recall.

Tire Ply Composition and Materials Used The number of plies indicates the number of layers of rubber-coated fabric in the tire. In general, the greater the number of plies, the more weight a tire can support. Tire manufacturers also must indicate the materials in the tire, which include steel, nylon, polyester, and others.

Maximum Load Rating This number indicates the maximum load in kilograms and pounds that can be carried by the tire.

Maximum Permissible Inflation Pressure This number is the greatest amount of air pressure that should ever be put in the tire under normal driving conditions.

1.5.9.2. UTQGS Information

Treadwear Number This number indicates the tire's wear rate. The higher the treadwear number is, the longer it should take for the tread to wear down. For example, a tire graded 400 should last twice as long as a tire graded 200.

Traction Letter This letter indicates a tire's ability to stop on wet pavement. A higher graded tire should allow you to stop your car on wet roads in a shorter distance than a tire with a lower grade. Traction is graded from highest to lowest as "AA","A", "B", and "C".

Temperature Letter This letter indicates a tire's resistance to heat. The temperature grade is for a tire that is inflated properly and not overloaded. Excessive speed, underinflation or excessive loading, either separately or in combination, can cause heat build-up and possible tire failure. From highest to lowest, a tire's resistance to heat is graded as "A",

"B", or "C".

1.5.9.3. Additional Information on Light Truck Tires

Please refer to the following diagram.

Tires for light trucks have other markings besides those found on the sidewalls of passenger tires.

LT The "LT" indicates the tire is for light trucks or trailers.

ST An "ST" is an indication the tire is for trailer use only.

Max. Load Dual kg (lbs) at kPa (psi) Cold This information indicates the maximum load and tire pressure when the tire is used as a dual, that is, when four tires are put on each rear axle (a total of six or more tires on the vehicle).

Max. Load Single kg (lbs) at kPa (psi) Cold This information indicates the maximum load and tire pressure when the tire is used as a single.

Load Range This information identifies the tire's load-carrying capabilities and its inflation limits.

1.6. Tire Safety Tips

Preventing Tire Damage

- Slow down if you have to go over a pothole or other object in the road.
- Do not run over curbs or other foreign objects in the roadway, and try not to strike the curb when parking.

Tire Safety Checklist

- Check tire pressure regularly (at least once a month), including the spare.
- Inspect tires for uneven wear patterns on the tread, cracks, foreign objects, or other signs of wear or trauma.
- Remove bits of glass and foreign objects wedged in the tread.
- Make sure your tire valves have valve caps.
- Check tire pressure before going on a long trip.
- Do not overload your vehicle. Check the Tire Information and Loading Placard or User's Manual for the maximum recommended load for the vehicle.

BEFORE YOU BEGIN USING YOUR TACK DISTRIBUTOR READ AND REREAD THE FOLLOWING COMMONLY ASKED QUESTIONS. YOU WILL PREVENT INJURIES AND INCREASE THE USEFUL LIFE OF YOUR MACHINE WHILE SAVING YOURSELF TIME AND MONEY.

WHY SHOULD I NEVER CLEAN THE TACK DISTRIBUTOR WITH A FLAMMABLE MATERIAL?

The diesel burners heat the tack to a point where flammable materials (depending on their flash point) could ignite and cause burn injuries to the operator. **To prevent burn injuries, always use a non-flammable, environmentally-friendly product to clean equipment.**

WHEN THE WEATHER IS COLD (40 degrees Fahrenheit and below), WHAT DO I NEED TO DO DIFFRENTLY TO GET THE DIESEL BURNER TO IGNITE?

When the outdoor temperature is 20-40 degrees Fahrenheit add a diesel fuel conditioner to the fuel tank per instructions on the fuel conditioner label.

When the outdoor temperature is below 20 degrees Fahrenheit, mix diesel fuel with kerosene at a 1:1 ratio and bring the equipment indoors until the fuel has warmed to a point where it is not gelling. Return the tack distributor outdoors and attempt to start the burner by turning the TACK toggle switch ON/UP.

CAN I USE BIO-DIESEL FUEL?

The Beckett diesel burner is designed to operate with #1 and #2 diesel fuel or up to B5 bio-diesel fuel. Attempting to run the diesel burner with bio diesel fuel exceeding B5 will lead to burner component failure and void the warranty on the Beckett burner. The burner is not engineered to run on bio-diesel fuels exceeding B5.

WILL I VOID THE WARRANTY ON THE DIESEL BURNER IF I USE BIO-DIESEL?

Use of bio-diesel fuel exceeding B5 will void the warranty on the burner and related failure(s).
The burners are designed to run on B5 bio-diesel fuel or #1 and #2 diesel fuel.

SHOULD I BE CONCERNED ABOUT TACK OVERSPILL ON THE TACK TANK AND FILL SPOUT?

Yes, Tack must be cleared away from top of the tank and fill spout so the tack material does not accidently ignite.

CAN I RUN THE TACK BURNER WITHOUT MATERIAL INSIDE THE TACK TANK?

No, The tack tank burner should never be turned on when there is no tack material inside the tank. Tack tank contents should always be 3" above the flue before running diesel burner.

CAN I ALLOW THE BURNER TO RUN IF THERE IS NO FUEL?

No, Do not allow any burner to run when the diesel fuel tank is near empty.

HOW IMPORTANT IS IT TO KEEP THE BATTERY FULLY CHARGED?

Nine times out of ten, the reason for the failure of a burner to light is a low voltage battery.

It is critical to keep the battery fully charged at 12.8 volts or the burner(s) will not light. A low battery, anything below 12.8 volts, may be the reason for a burner failing to light. Falcon RME recommends hooking up the towing vehicle battery to the tack distributor battery to keep it charged throughout the day. The battery must be hooked up to a battery charger overnight. Use a heavy-duty UL approved extension cord and plug the cord into the tack distributor BEFORE plugging into a 120VAC ground fault interrupt circuit (building power).

HOW SHOULD I ADJUST THE HITCH ON THE TRAILER?

When hooking up the trailer to the towing vehicle, adjust the trailer hitch so it is towed level.

IF THE TACK DISTRIBUTOR WON'T START, WHAT SHOULD I DO?

Read the operator's manual -- STARTING THE DIESEL BURNER AND SETTING THE TEMPERATURE CONTROLLER section of the manual.

WHAT HAPPENS IF I FAIL TO FLUSH THE TACK TANK SPRAY SYSTEM AFTER EACH USE?

The tack material will build up in the spray system hose and pump and you will not be able to spray tack. **You must flush tack material from the spray system after each use or you will have component failure that is not covered under the warranty.**

WHAT HAPPENS WHEN THE DIESEL BURNER TOGGLE SWITCH IS FLIPPED MORE THAN ONCE -- WHY SHOULD I AVOID DOING THIS?

Each time the tack toggle switch is turned on, diesel fuel is injected into the burner. When the burner does not ignite the most likely causes are 1) a low voltage battery or 2) gelled fuel in cold weather. When the problem is resolved and the TACK toggle switch is turned on, all the fuel in the burner will ignite and smoke will come out the chimney. Adequate time should be given to allow excessive diesel fuel to burn off. Burner should run until smoke from the chimney cannot be seen. After smoke is no longer visible, turn off the diesel burner and clean the CAD cell eye. Burning off excess diesel fuel clouds the CAD cell and prevents the burner from running as designed. Turn burner on as needed after cleaning CAD cell eye.

HOW DO I GET THE DIESEL BURNER TO START IN EXTREMLY COLD CONDITIONS?

If the weather is cold and you have checked that the battery is fully charged, bring the trailer indoors and allow the diesel fuel to warm to room temperature **before returning trailer outdoors** to turn the burner on again. Do not continue to turn the burner on and off for the reason described in the previous question.

WHAT SHOULD I DO IF I SEE STEAM COMING OUT OF THE BURNER GASKET AREA?

If steam can be seen seeping out from the burner gasket near the combustion chamber flange, the gasket should be changed by a qualified burner mechanic. This gasket deteriorates over time and must be replaced when it is worn to extend the life of the equipment.

IF YOU HAVE QUESTIONS OR CONCERNS ABOUT YOUR TACK DISTRIBUTOR, YOU MAY CALL FALCON RME DIRECTLY FOR ASSISTANCE AT (989) 495-9332.

WHAT ARE SOME IMPORTANT ONGOING MAINTENANCE ITEMS?

Lugnuts must be kept at 100 foot pounds of torque and tires inflated to pressure on sidewall of tire.

Perform periodic routine maintenance items identified in the operator's manual.

Grease wheel bearings per lubrication schedule.

At every tow vehicle oil change, check the battery supply wires of the tow vehicle to ensure the tack distributor battery is receiving AT LEAST 12.8 volts.

Every 1,000 hours, inspect the combustion chamber flange gasket to ensure a good seal.

Check water separator (located on the bottom of the fuel filter) regularly and empty water as needed. CAUTION: Bad diesel fuel or condensation build-up in the bottom of the tank could cause fuel filter, fuel lines and/or fuel pump to freeze and brake.

SPRAY SYSTEM HELPFUL HINTS:

READ SPRAY SYSTEM INSTRUCTIONS CAREFULLY.

BEFORE EACH USE, CONFIRM THERE IS OIL IN HONDA MOTOR BEFORE STARTING. USE UNLEADED GASOLINE (NOT DIESEL FUEL) IN HONDA MOTOR .

AFTER EACH USE PERFORM SPRAY SYSTEM FLUSH PROCEDURE.

BALL VALVES ARE CLOSED WHEN PERPENDICULAR TO PLUMBING -- OPEN WHEN PARALLEL TO PLUMBING.

ALLOW TACK MATERIAL TO HEAT TO TACK MATERIAL MANUFACTURER'S RECOMMENDED TEMPERATURE BEFORE TURNING ON HONDA MOTOR.

ALLOW TACK MATERIAL TO BLEND 10 MINUTES (WITH MOTOR RUNNING) BEFORE SPRAYING.

DO NOT STORE MATERIAL IN TACK TANK. EMPTY UNUSED MATERIAL AT THE END OF THE DAY. WAIT UNTIL TACK MATERIAL HAS COOLED BEFORE EMPTYING TACK DISTRIBUTOR TANK. FLUSH TANK MATERIAL CAN BE LEFT IN THE RESERVOIR.

SUMMARY

DO… ALWAYS KEEP BATTERIES CHARGED TO 12.8 VOLTS.

DO…. REMOVE UNUSED TACK FROM TANK AT THE END OF THE WORKDAY AFTER IT HAS COOLED.

DO… PERFORM FLUSH THE TACK TANK SPRAY SYSTEM AFTER EACH USE. FAILURE TO FLUSH THE SPRAY SYSTEM WILL CAUSE THE PUMP TO SEIZE UP AND FAIL.

DO USE A FUEL CONDITIONER WHEN TEMPERATURES ARE BETWEEN 20 AND 40 DEGREES.

DO HOOK UP THE TACK DISTRIBUTOR TO THE TOWING VEHICLE SO THAT IT RIDES LEVEL.

DO PERFORM ONGOING MAINTENANCE.

DO NOT USE BIO-DIESEL FUEL EXCEEDING B5 OR DIESEL BURNER COMPONENTS WILL FAIL.

DO NOT RUN THE BURNER TOO HOT.

DO NOT RUN THE BURNER ON AN EMPTY FUEL TANK.

DO NOT RUN BURNER WHEN TACK MATERIAL IS LOWER THAN 3” ABOVE THE FLUE. ADD TACK MATERIAL WHEN TACK LEVEL IS LESS THAN 3” ABOVE THE FLUE BUT ALWAYS LEAVE THE FILL SPOUT AND THE TOP 4” OF THE TACK TANK EMPTY SO TACK MATERIAL CAN EXPAND AS IT HEATS. DO NOT ALLOW TACK MATERIAL IN THE TANK TO SPLASH WHEN ADDING MORE TACK.

DO NOT OVERHEAT TACK.

ADC

12Vdc Oil Burner Manual

Beckett™
CORPORATION

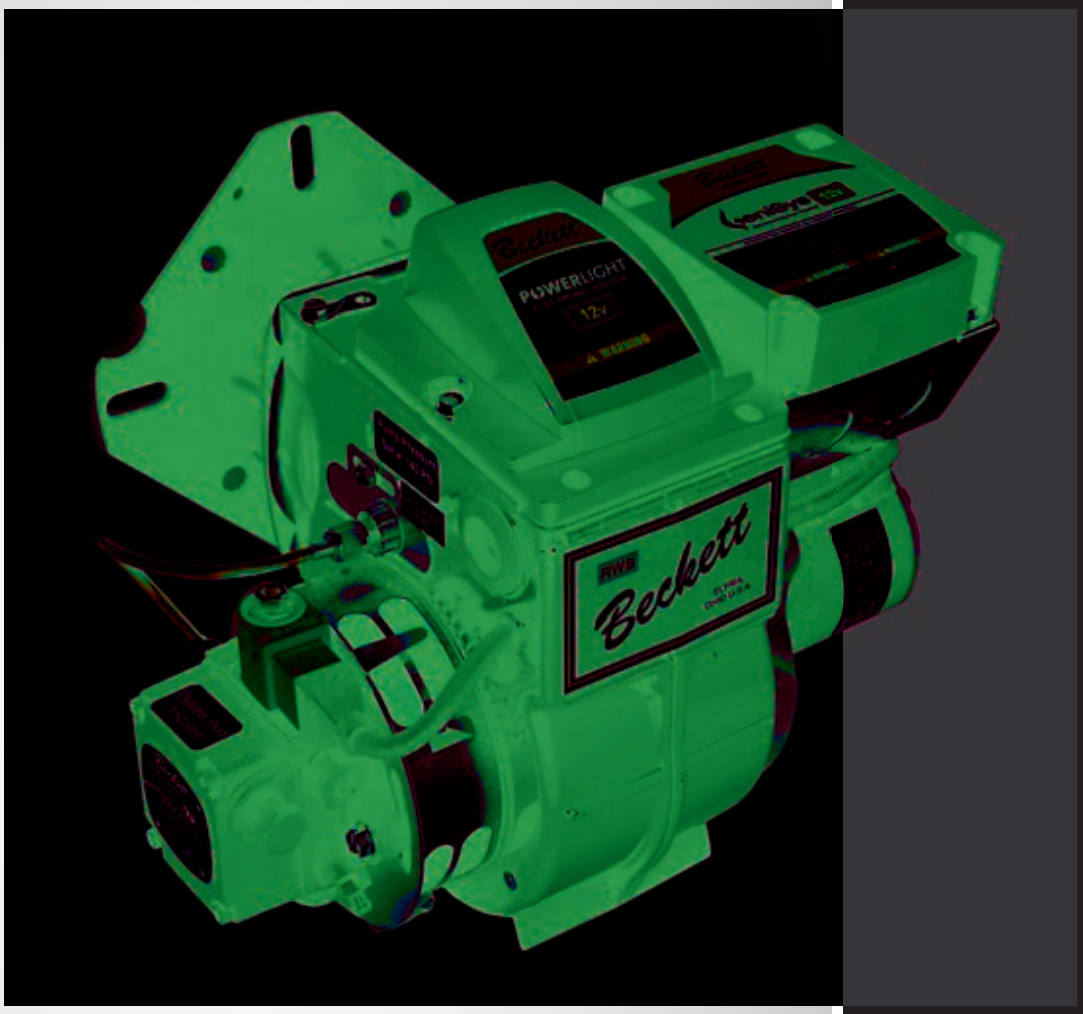

⚠ WARNING **Potential for Fire, Smoke and Asphyxiation Hazards**

Incorrect installation, adjustment, or misuse of this burner could result in death, severe personal injury, or substantial property damage.

To the Homeowner or Equipment Owner:

- Please read and carefully follow all instructions provided in this manual regarding your responsibilities in caring for your heating equipment.
- Contact a professional, qualified service agency for installation, start-up or service work.
- READ THESE INSTRUCTIONS AND SAVE FOR REFERENCE.

To the Professional, Qualified Installer or Service Agency:

- Please read and carefully follow all manual instructions and any supplements provided, before installing, starting, or servicing this burner or heating system.
- The Installation must be made in accordance with all state and local codes having jurisdiction.

Contents

Burner Application Scope and Intended Use 2

Prepare Before Installing 3
- Specifications 3
- Notice Special Requirements 3

General Information 4
- A. Equipment Located in Confined Space 4
- B. Exhaust Fans and Other Air-Using Devices 4
- C. Clearances to Burner and Equipment 4
- D. Exhausting Hazardous Fumes 4
- E. Low Firing Rate Baffle. 5

Nozzle Assembly Maintenance 5
- A. Replace the Burner Nozzle 5
- B. Check/Adjust Electrodes 6
- C. Igniter Maintenance 6
- D. Servicing Nozzle Line Assembly 6
- E. Check/Adjust "Z" Dimension 6

Fuel Supply 7
- A. Connect Fuel Lines 7
- B. Fuel Supply Level with or Above Burner 7
- C. Fuel Supply Below Level of Burner 7
- D. Fuel Line Replacement (Remote Tank Only) 7
- E. Fuel Line Valve and Filter 7

Burner Wiring 7
- A. Burner installed on equipment 7
- B. Burner Replacement 7

Drive Component Maintenance 9
- A. Motor, Blower Wheel, and Coupling Replacement 9
- B. Pump Maintenance 10
- C. Valve Coil and Stem Replacement 10

Start Up Burner & Set Combustion 10
- A. Basic Burner Operation 10
- B. Combustion Set-up 11
- C. Set Combustion with Instruments 11

Maintain & Service Burner 12
- A. Owner's Information 12
- B. Owner Service and Maintenance 12
- Extended Down Time 12
- Regular Service/Maintenance 12

Troubleshooting 13

Replacement Parts 15

Limited Warranty Information 16

Hazard Definitions

DANGER **Indicates a hazardous situation, which, if not avoided, will result in death or serious injury.**

WARNING **Indicates a hazardous situation, which, if not avoided, could result in death or serious injury.**

CAUTION **Indicates a hazardous situation, which, if not avoided, could result in minor or moderate injury.**

Within the boundaries of the hazard warning, there will be information presented describing consequences if the warning is not heeded and instructions on how to avoid the hazard.

NOTICE Intended to bring special attention to information, but not related to personal injury or property damage.

Burner Application Scope and Intended Use

The ADC burner is designed for use in road maintenance equipment applications that have DC voltage charging systems capable of sustaining the specified voltage requirements. For other equipment applications, please contact Beckett Technical Services at 1-800-645-2876.

Prepare Before Installing

WARNING **Owner's Responsibility**

Incorrect installation, adjustment, and use of this burner could result in severe personal injury, death, or substantial property damage from fire, carbon monoxide poisoning, soot or explosion.

Contact a professional, qualified service agency for the installation, adjustment and service of your oil heating system. This work requires technical training, trade experience, licensing or certification in some states and the proper use of special combustion test instruments.

Please carefully read and comply with the following instructions:

- Never store or use gasoline or other flammable liquids or vapors near this burner or appliance.
- Never attempt to burn garbage or refuse in this appliance.
- Never attempt to light the burner/appliance by throwing burning material into the appliance.
- Never attempt to burn any fuel not specified and approved for use in this burner.
- Never restrict the air inlet openings to the burner or the combustion air ventilation openings in the room.

WARNING **Impaired Burner Performance and Fire Hazard.**

Do NOT operate the burner beyond specifications outlined in the table to the right.

- For applications beyond these limits, consult Beckett Technical Service at 1-800-645-2876.
- NOTE: Some packaged appliances with burners may be agency listed as a unit to operate beyond these limits. Consult the appliance manufacturer's specifications and agency approvals for verification.

Specifications

Capacity	*'F' Head* *Firing Rate:* 0.75 - 2.50 GPH *Input:* 105,000 - 350,000 Btu/h
Fuels	*USA:* No. 1 or No. 2 diesel fuel or kerosene; No.1 or No. 2 heating oil (ASTM D396) **CAUTION** **DO NOT USE GASOLINE, CRANKCASE OIL, OR ANY OIL CONTAINING GASOLINE.**
Electrical	*Power Supply:* 13.5 Vdc *Operating Load* w/ igniter on: 15 Amps w/ igniter off: 8 - 10 Amps *Motor: 13.5Vdc, 1/6 hp,* 3450 RPM, 10 Amps (max.) NEMA "M" Flange, rotation CCW when facing shaft end. *Ignition Secondary: 20KVpk 25mA* Interrupted duty OR optional continuous duty.
Pump	*Outlet pressure:* Note 1
Dimensions	*Height (maximum):* 11 ½ inches *Width (maximum):* 14 3/8 inches *Depth (chassis only):* 6 9/16 inches *Air tube diameter:* 4 inches
Ambient Operating Temperature	+32° F. (0° C.) Minimum +115° F. (+46° C.) Maximum (See Warning on Impaired Burner Performance and Fire Hazard.)

Note 1. See equipment manufacturer's burner specifications for recommended outlet pressure. Pressure is 100 psig unless otherwise noted.

Notice Special Requirements

NOTICE If you discover damage to the burner or controls during unpacking, notify the carrier at once and file the appropriate claim.

NOTICE When contacting Beckett for service information — Please record the burner serial number (and have available when calling or writing). You will find the serial number on the silver label located on the left rear of the burner. See ***Figure 1***.

WARNING **Adequate Voltage Required**

A low or erratic power supply could result in impaired burner operation, severe delayed ignition or an explosion inside the heat exchanger resulting in a burn and/or asphyxiation hazard.

- The Model ADC requires a continuous supply of 11 to 16 volts DC at 15 amps measured at the burner during operation.
- An automotive or small engine charging system that is capable of supplying the required continuous voltage/ amperage is recommended with certain road equipment, such as asphalt hot patchers and similar applications.
- This is especially true while maintaining nominal load temperatures during idle periods.

WARNING **Adequate Combustion and Ventilation Air Supply Required**

Failure to provide adequate air supply could seriously affect the burner performance and result in damage to the equipment, asphyxiation, explosion or fire hazards.

- The burner cannot properly burn the fuel if it is not supplied with a reliable combustion air source.
- Follow the guidelines in the latest editions of the NFPA 31 and CSA-B139 regarding providing adequate air for combustion and ventilation.

Table 2. Air Tube Combination (ATC) Codes

Firing Rate GPH	Head	Static Plate Size	ATC Codes for Usable Air Tube Lengths: ('A' in inches see *Fig. 2*)		
min-max		inches	4-1/2	5-3/8	6-5/8
0.40 - 0.75	F0	3-3/8U	AF44XR	AF53XR	AF65XR
0.75 - 1.25	F3	2-3/4	AF44XN	AF53XN	AF65XN
0.85 - 1.35	F4	2-3/4	AF44WH	AF53WH	AF65WH
0.85 - 1.65	F6	2-3/4	AF44YB	AF53YB	AF65YB
1.10 - 2.00	F12	2-3/4	AF44XO	AF53XO	AF56XO
1.65 - 2.50	F22	2-3/4	AF44XP	AF53XP	AF56XP

*See page 3 for capacity and voltage specifications.

General Information

Refer to the Troubleshooting section of this manual when experiencing a possible fault condition.

A. Equipment Located in Confined Space

The confined space should have two permanent openings: one near the top of the enclosure and one near the bottom of the enclosure. Each opening shall have a free area of not less then one square inch per 1,000 BTU's per hour of the total input rating of all equipment within the enclosure. The openings shall have free access to the building interior, which should have adequate infiltration from the outside.

B. Exhaust Fans and Other Air-Using Devices.

Size air openings large enough to allow for all air using devices in addition to the minimum area required for combustion air. If there is any possibility of the equipment room developing negative pressure (because of exhaust fans, for example), either pipe combustion directly to the burner or provide a sealed enclosure for the burner and provide it with its own combustion air supply.

C. Clearances to Burner and Equipment

Provide space around burner and equipment for easy service and maintenance. Check minimum clearances against those shown by the equipment manufacturer and by applicable codes.

D. Exhausting Hazardous Fumes

See warning on this page. Also be conscious of any fumes produced by the materials that are being heated. Always ensure adequate ventilation to exhaust all fumes.

Table 1. Low Firing Rate Baffle

Head Type	Low Firing Rate Baffle (if specified)
F0	up to 0.65 gph
F3	up to 0.85 gph
F4 or F6	up to 0.90 gph

Figure 1. Typical Burner Nameplate

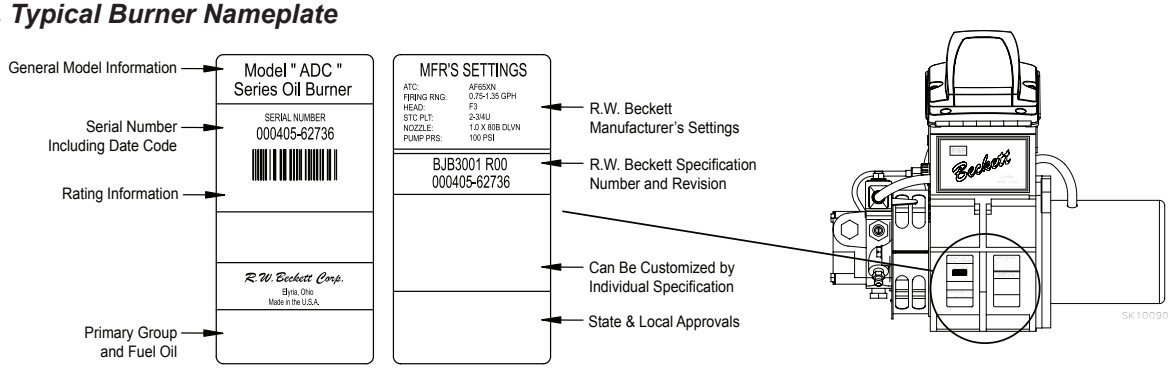

E. Low Firing Rate Baffle.

The low firing rate baffle (See LFRB in Replacement Parts) reduces the air flow and pressure. The LFRB is sometimes used for firing rates under 1.00 gph as listed in ***Table 1***. Refer to the equipment manufacturer's instructions. Do not omit the LFRB when specified. Omitting the baffle when specified or installing the baffle when not specified could result in poor burner performance.

Nozzle Assembly Maintenance

WARNING **Correct Nozzle and Flow Rate Required**

Incorrect nozzles and flow rates could result in impaired combustion, under-firing, over-firing, sooting, puff-back of hot gases, smoke and potential fire or asphyxiation hazards.

Use only nozzles having the brand, flow rate (gph), spray angle and pattern specified by the appliance manufacturer.

Follow the appliance manufacturer's specifications for the required pump outlet pressure for the nozzle, since this affects the flow rate.

- Nozzle manufacturers calibrate nozzle flow rates at 100 psig.
- When pump pressures are higher than 100 psig, the actual nozzle flow rate will be greater than the gph stamped on the nozzle body. (Example: A 1.00 gph nozzle at 140 psig = 1.18 gph)

Securely tighten the nozzle (90 torque inch pounds). For typical nozzle flow rates at various pressures refer to ***Table 3***.

A. Replace the Burner Nozzle.

1. If applicable, remove the plastic plug protecting the nozzle adapter threads.
2. Place a 3/4" open-end wrench on the nozzle adapter. Insert the nozzle into the adapter and finger tighten. Finish tightening with a 5/8" open-end wrench.
3. If the nozzle is already installed, remove the nozzle line assembly to verify that the nozzle size and spray pattern are correct for the application (per equipment manufacturer's information). Verify that the electrode tip settings comply with ***Figure 2***.

CAUTION **Use care when removing or installing an oil nozzle**

A damaged nozzle could cause impaired combustion, sooting, puffback of hot gases, oil leakage and potential fire or asphyxiation hazards.

- Inspect the nozzle adapter to insure that the sealing surface is not grooved or scratched.
- To insure that the nozzle functions properly, check the orifice and strainer for dirt, scratches or other damage before installation.
- Do NOT attempt to install or remove a nozzle without securing the adapter to prevent seriously damaging the alignment.
- Use care when handling the nozzle line assembly to prevent changing the electrode tip settings or damaging the ceramic electrode insulators.
- Ensure that the electrode settings match the values shown in ***Figure 2***.

Figure 2. Electrode Tip Setting

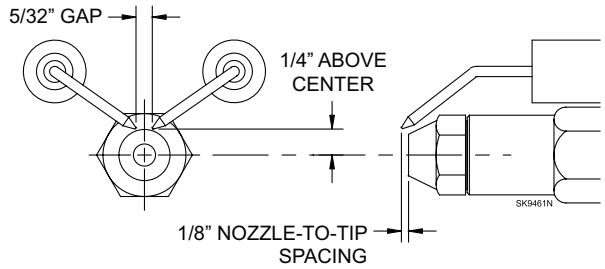

Figure 5. Nozzle, Line & Electrode Assembly

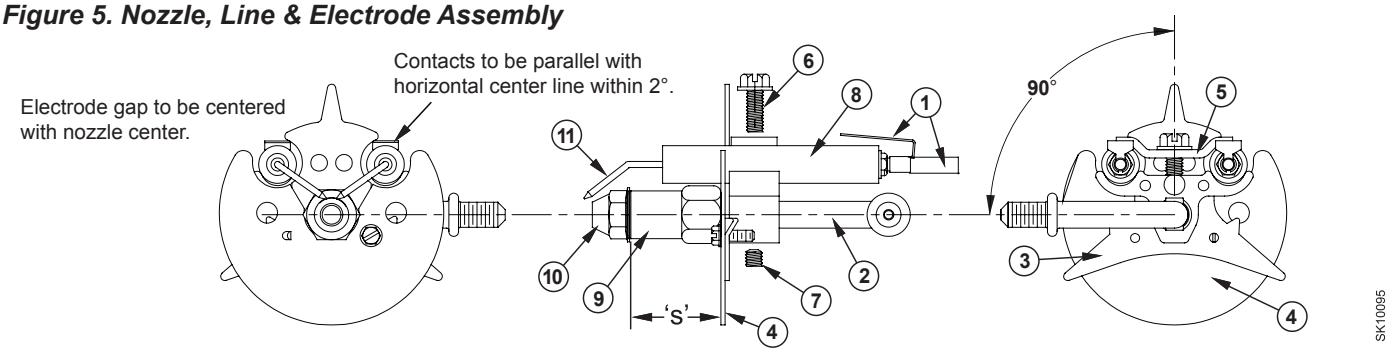

Item #	Description
1	Electrode Contact (3" ATC or extension over 3")
2	Nozzle Line
3	Spider spacer assembly
4	Static Plate
5	Electrode clamp
6	Electrode clamp retaining screws

Item #	Description
7	Nozzle line setscrew
8	Electrode Insulator
9	Nozzle adapter
10	Nozzle tip
11	Electrode tip

B. Check/Adjust Electrodes

Check the electrode tip settings. Adjust if necessary to comply with the dimensions shown in ***Figure 2***. To adjust, loosen the electrode clamp screw and slide/rotate electrodes as necessary. Securely tighten the clamp screw when finished.

C. Igniter Maintenance

The igniter assembly does not require any adjustments beyond making sure the springs and the burner electrode rods make solid contact when the igniter is in the closed position. The sealing surfaces of the gaskets should be checked and replaced at the first signs of any damage or deterioration. Clean any dirt or residue from the porcelain bushings, springs, and baseplate.

The simplest way to check igniter operation is by supplying voltage to the input and checking to see whether an arc is produced. Check by either looking or listening to see if there is an arc across the electrodes while the burner is running and the igniter is energized.

The igniter must be grounded to the burner before checking the following. To check the igniter, ensure all power to the burner is off and use an ohmmeter to check the resistance between the two springs. The meter should read between 480 - 580 ohm.

The igniter should be replaced if the meter indicates an open circuit, or the spring-to-spring resistance exceeds the 480 - 580 ohm range by more than 10%.

D. Servicing Nozzle Line Assembly

Before proceeding, turn off power to the burner.

1. Disconnect the oil connector tube from the nozzle line.
2. Referring to ***Figure 3***, loosen the two screws securing the igniter retaining clips **(a)** and rotate both clips to release the igniter baseplate. Then tilt the igniter back on its hinge.
3. Remove the splined nut **(b)**.
4. Remove the nozzle line assembly from the burner, being careful not to damage the electrodes or insulators while handling. To ease removal of short assemblies, it may be necessary to loosen the escutcheon plate **(c)**. Reset to the edge of the label.
5. To replace the nozzle line assembly, reverse the above steps.

Figure 3. Igniter Hinge & Retainer Clips

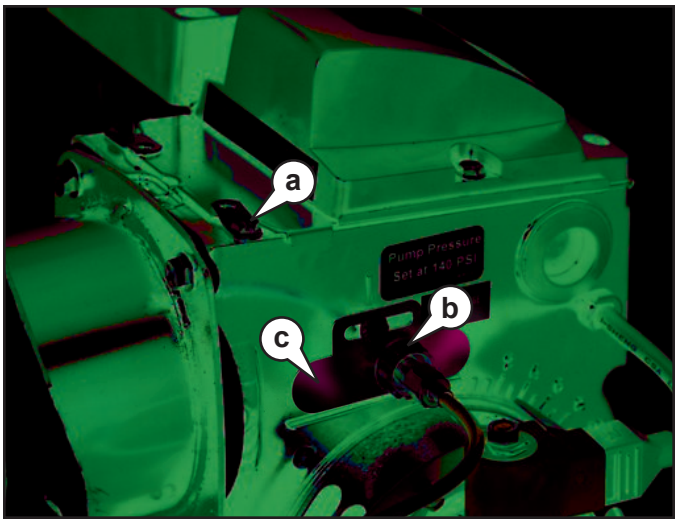

E. Check/Adjust “Z” Dimension

Refer to ***Figure 4***. The critical “Z” dimension is the distance from the face of the nozzle to the flat face of the head. This distance for F heads is 1-1/8”. The “Z” dimension is factory set for burners shipped with the air tube installed but should always be verified during service and installation. If the “Z” dimension is out of adjustment, perform the following steps.
Before proceeding, turn off power to the burner.

1. Disconnect the oil connector tube from the nozzle line.
2. Referring to ***Figure 5***, loosen the splined nut from the nozzle line. Loosen the hex head screw securing the escutcheon plate to the burner housing.
3. A Beckett T650 gauge should be used to set the Z dimension.
4. Place the end of a ruler at the face of the nozzle and, using a straight edge across the head, measure the distance to the face of the head.
5. Slide the nozzle line forward or back until this dimension for F heads is 1-1/8”.
6. Tighten the hex head screw to secure the escutcheon plate to the burner chassis. Then tighten the splined nut and attach the oil connector tube.
7. Recheck the “Z” dimension periodically when servicing to ensure the escutcheon plate has not shifted. You will need to reset the “Z” dimension if you replace the air tube or nozzle line assembly.

Figure 4. ‘Z’ Dimensions Using Gauge

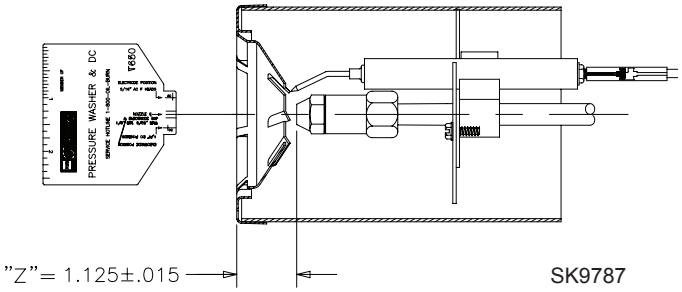

NOTICE The Beckett Z gauge (part number Z-2000) is available to permit checking the F head "Z" dimension without removing the burner.

Fuel Supply

A. Connect Fuel Lines

WARNING **Do Not Install Bypass Plug with 1-Pipe System**

Failure to comply could cause Immediate pump seal failure, pressurized oil leakage and the potential for a fire and injury hazard.

- The burner is shipped without the bypass plug installed.
- Install the bypass plug in two-pipe oil supply systems ONLY.

For oil supply system specifications for tanks not mounted on machines, carefully follow the pump manufacturer's literature and the latest edition of the National Fire Protection Association (NFPA) 31 standard.

NOTICE Pumps with automatic bypass do not require a bypass plug. Verify by referring to the pump manufacturer's instructions.

B. Fuel Supply Level with or Above Burner

The burner may be equipped with a single stage pump. If a one-pipe system is installed, verify a bypass plug is not installed in the pump, then connect the fuel supply to the burner with a single supply line Note that manual bleeding of the pump is required on initial start-up or when the equipment runs out of fuel. When connecting a two-pipe fuel system, install the pump bypass plug.

CAUTION **Oil Supply Pressure Control Required**

Damage to the filter or pump seals could cause oil leakage and a fire hazard.

- The oil supply inlet pressure to the burner ***cannot exceed 3 psig***.
- Ensure that a pressure limiting device is installed in accordance with the latest edition of NFPA 31.
- **Do NOT install valves in the return line.** (NFPA 31, Chapter 8.)
- **Gravity Feed Systems:** Always install an anti-siphon valve in the oil supply line or a solenoid valve (RWB Part # 22246U) in the pump/nozzle discharge tubing to provide backup oil flow cut-off protection.

C. Fuel Supply Below Level of Burner

When the fuel supply is more than eight feet below the level of the burner, a two-pipe fuel supply system is required. Depending on the fuel line diameter and the horizontal and vertical length, the installation may also require a two-stage pump. Consult the fuel unit manufacturer's literature for lift and vacuum capability.

D. Fuel Line Replacement (Remote Tank Only)

When replacing fuel lines, continuous lengths of heavy wall copper tubing is recommended. To ensure a tight seal, always use flare fittings. Never use compression fittings. Always install fittings in an accessible location. To avoid vibration noise, fuel lines should not run against the appliance or the ceiling joists.

E. Fuel Line Valve and Filter

CAUTION **Do Not Use Teflon Tape**

Damage to the pump could cause impaired burner operation, oil leakage and appliance soot-up.

- Never use Teflon tape on fuel oil fittings.
- Tape fragments can lodge in fuel line components and fuel unit, damaging the equipment and preventing proper operation.
- Use oil-resistant pipe sealant compounds.

Shutoff valves should be located in the oil supply line. Do not install valves in the return line.

Burner Wiring

A. Burner installed on equipment

Refer to appliance manufacturer's wiring diagram for electrical connections.

WARNING **Electrical Shock Hazard**

Electrical shock can cause severe personal injury or death.

- Disconnect electrical power before installing or servicing the burner.
- Provide ground wiring to the burner, metal control enclosures and accessories. (This may also be required to aid proper control system operation.)

B. Burner Replacement

Burner wiring may vary, depending on the actual primary control and furnished options. Refer to ***Figure 6*** for typical burner wiring, showing cad cell primary controls. Note that the relay and control, shown in the wiring diagram are optional features.

Figure 6A. Typical Wiring For Constant Duty Ignition - With No Primary Control

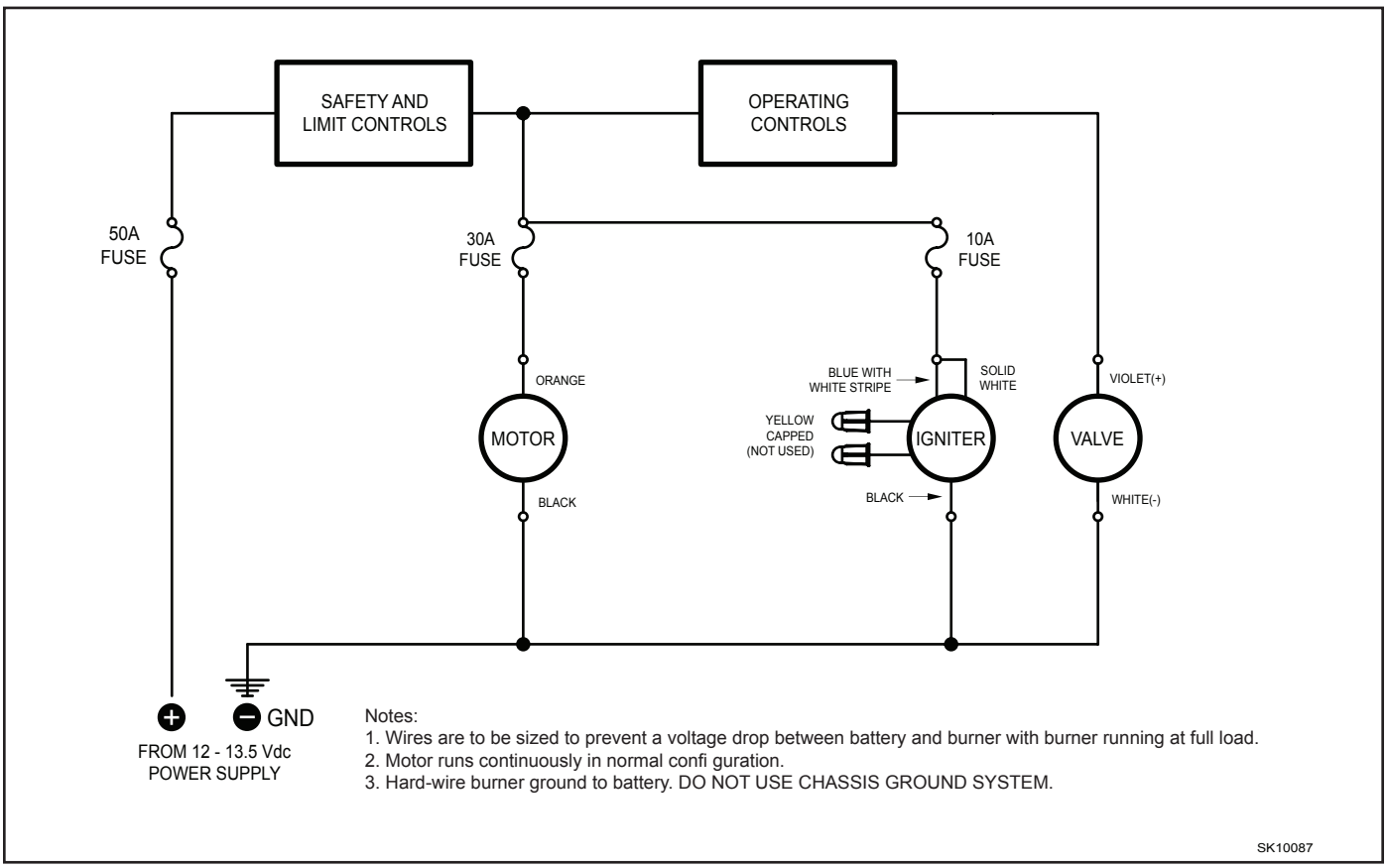

Figure 6B. Typical Wiring For Interrupted Ignition - With No Primary Control

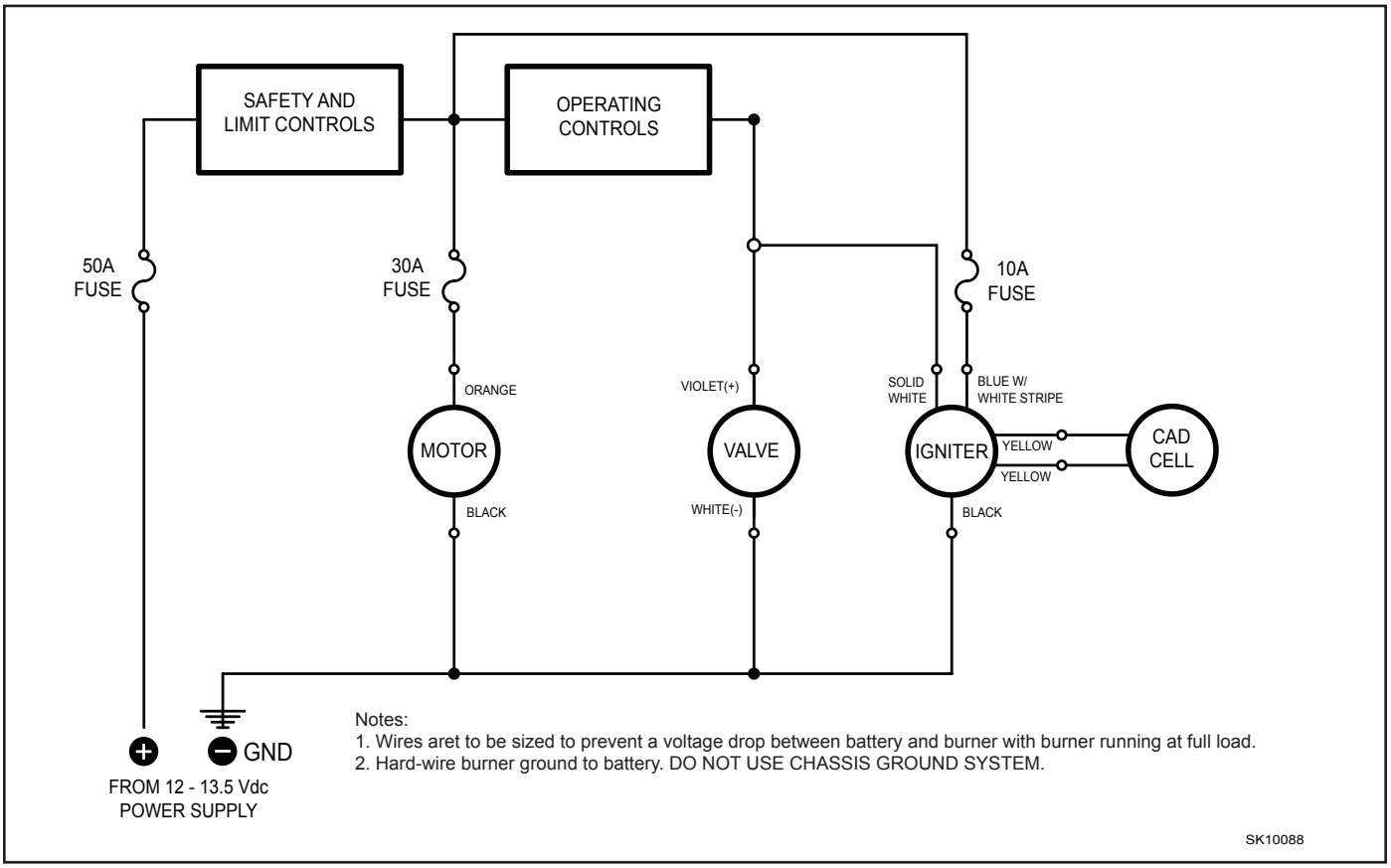

Figure 6C. Typical Wiring with 7556 Primary Safety Control

Notes:

1. Wires are to be sized to prevent a voltage drop between the battery and the burner with the burner running at full load.
2. Fuse Sizes (inside control):
Motor = 30 Amp
Igniter, Control, Valve, & Alarm = 10 Amp
3. Hard-wire burner ground to battery. Do NOT use chassis ground system.
4. Input power to the control's +12 Volt wire shall be provided from a fused service switch, rated at 50 amps or less.
5. Motor-off delay on a 7556P will be disabled if the safety and operating limits as shown in ***Figure 6C*** interrupt power to the control's red +12 Volt wire.
6. Do not wire power directly to the burner motor. Only wire the motor as shown in ***Figure 6C***. If instant burner heat is required by the application, purchase or program a control with a long motor-off delay time, which will ensure instant heat if a new call for heat is received within the motor-off delay time.
7. Igniter Yellow leads are capped and not used. Bundle with the other leads in the wiring box with a cable tie.
8. The igniter Blue-White striped and solid White leads are combined with the 3274001 "Y" connector and attached to the primary control igniter spade terminal.

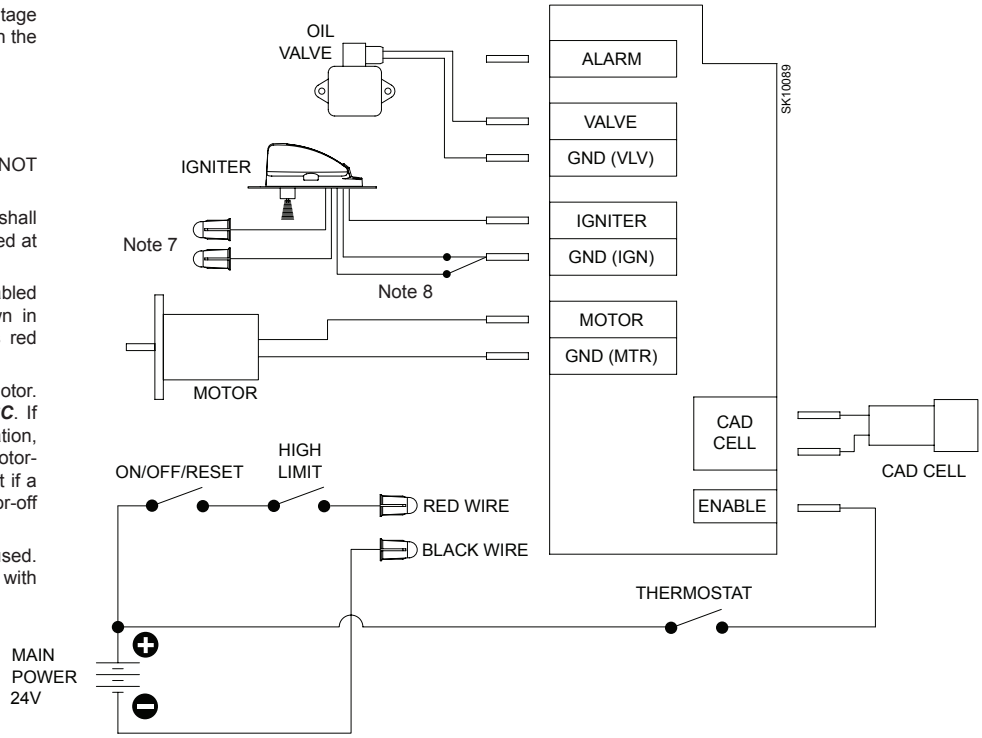

Drive Component Maintenance

A. Motor, Blower Wheel, and Coupling Replacement

The motor will require replacement if the proper voltage is measured at the motor input, and the motor will either not run, or the current draw with a free running pump exceeds 10% of the rated current.

To replace the burner motor, coupling and/or blower wheel perform the following steps.

1. Before servicing, turn off and/or disconnect all power to the burner.
2. Disconnect the burner motor wires.
3. Remove the bolts securing the motor to the burner housing.
4. Remove the motor, coupling, and blower wheel.
5. Loosen the set screw on the blower wheel to slide the existing wheel off the shaft.
6. Slide the new blower wheel onto the old shaft (after thoroughly cleaning housing) and/or slide the old blower wheel onto the new motor shaft.
7. Place a .030" (1/32" ± 1/64") feeler gauge between the blower wheel and the motor housing.
8. Slide the blower wheel toward the motor until it contacts the feeler gauge.
9. Rotate the blower wheel until the setscrew is centered on the flat of the motor shaft. Tighten the setscrew to secure the wheel.
10. Slide the motor coupling on the motor shaft, then install the motor on the burner housing. Ensure that the motor coupling fits between the motor shaft and the pump shaft inside the housing. Tighten the motor retaining screws. Reconnect the wires.
11. Restore power, start the burner and perform the combustion test described previously in this manual.

Figure 7. – Blower Wheel

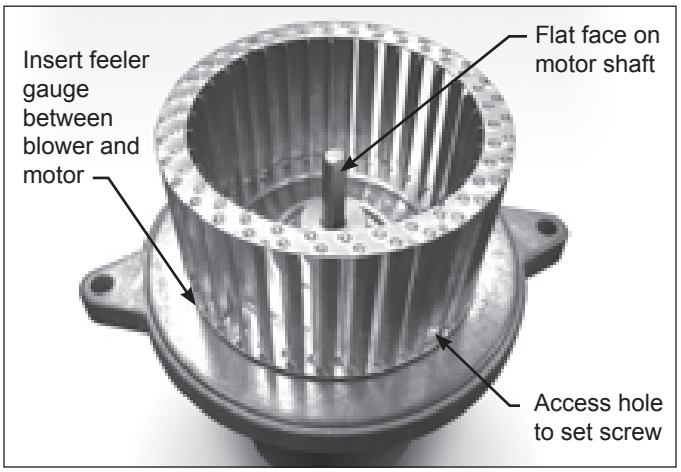

B. Pump Maintenance

General Pump Information

Important information - Long or oversized inlet lines may require the pump to operate dry during initial bleeding period. In such cases, the priming may be assisted by injecting fuel oil in the pump gear set. Under lift conditions, lines and fittings must be air tight. To assure this, “Pipe Dope” may be applied to both the used and unused inlet and return fittings. **Do NOT use Teflon tape or compression fittings**

Mounting Position - Beckett CleanCut pump may be mounted in any position (except upside-down in a single pipe installation).

Vacuum Check - A Vacuum Gauge may be installed in either of the 1/4” NPT inlet ports.

Pressure Check- When a pressure check is made, use the nozzle port. If the bleed port is used, the reading on the gauge should be approximately 5 psig higher than the pressure reading on the nozzle port. See ***Figure 8***.

Cutoff Check - To check cutoff pressure dead head a pressure gauge in the nozzle port. Run the burner for a short period of time. Shut the burner off. The pressure will drop and hold above zero. Pressurized or gravity feed installations must not exceed 3 psig on inlet line or return line at the pump per NFPA 31. A pressure greater than 10 psig may cause damage to the shaft seal.

C. Valve Coil and Stem Replacement

To determine if the valve coil requires replacement perform the following steps.

1. Remove the cord set from the valve.
2. Place the leads from an ohmmeter across the coil.
3. A 12Vdc volt coil should measure between 15 and 25 ohms.
4. If the meter indicates an open circuit, replace the coil.

Figure 8. – Pump and Valve Assemblies

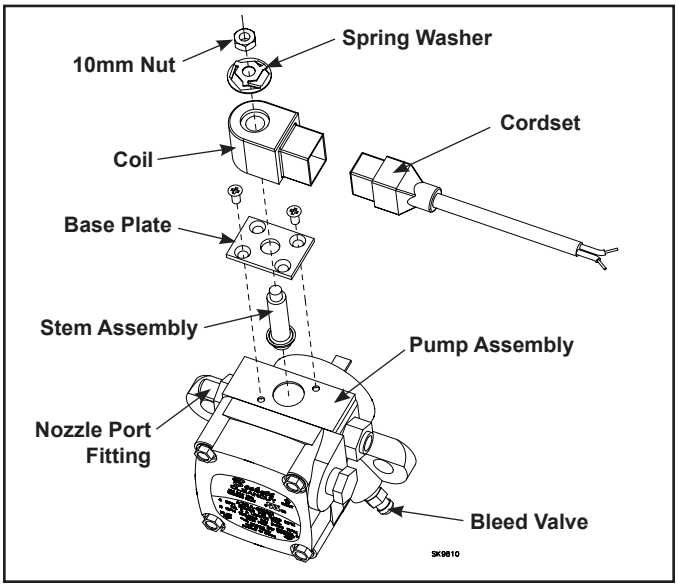

To check pump operation perform the following.

1. Check the operating pressure by removing the copper tubing from the nozzle line and installing a pressure gauge in the line. With the motor running and the coil energized, check the gauge. The pressure should read 100 psig unless otherwise stated.
2. To check the cutoff function, deadhead the pressure gauge onto the copper connector tube attached to the nozzle port. Run the burner for a short period of time. Shut the burner off; the pressure should drop and hold.

To replace the coil and/or pump assembly perform the following steps.

1. Before servicing, turn off and/or disconnect all power to the burner.
2. Remove the copper tube assembly when replacing the pump or when removing the coil and the tube blocks the coil.
3. Using a flat tip screwdriver, press the flat tip into the spring washer to prevent it from rotating.
4. Using a 10mm wrench or adjustable wrench, remove the nut and spring washer.
5. Remove the coil by lifting it straight up.
6. Remove the two base plate screws, then the base plate by lifting straight up.
7. Remove valve stem assembly by pulling straight up.
8. To install the new stem and coil assemblies, follow the above steps in reverse order, tightening each part as you go.
9. Restore power, start the burner and perform the combustion test described previously in this manual.

Start Up Burner & Set Combustion

A. Basic Burner Operation

Typical Constant Duty Ignition Configuration - With this Beckett ADC oil burner configuration, the motor and igniter operate continuously while the valve that controls oil flow is cycled by the switches on the power washer. The motor is used to drive the blower and pump. The rotational speed of the motor is determined by the voltage supplied and the load placed on the motor. Pump pressure and air settings are the main factors affecting the motor load. The igniter converts battery DC voltage into a high voltage spark to ignite the oil. The igniter is capable of running continuously as long as the blower wheel is circulating air across the igniter base. The pump and solenoid valve are used to control the flow of oil from the reservoir to the nozzle.

Igniter with Interrupted Duty Ignition - This optional control circuit is available to reduce current draw on the charging system by turning the igniter off after a flame has been established. This option controls igniter operation based on a signal from a light sensing cad cell. When light hits the cell the control will sense a decrease in resistance across the sensor. A few seconds delay will occur prior to the igniter switching off. As long as sufficient light is reaching the cell eye, the igniter will remain off. If light is removed from the sensor, the igniter will turn on until light is again sensed by the cad cell.

With 7556 Primary Safety Control - The 7556 control provides the same benefits as the ignition control board as described above as well as added safety, convenience, and performance features. It adds a valve on delay and motor-off delay to the burner's operation sequence that promote clean burner operation. It has a lock-out function that shuts the burner down if it is not operating properly. The control adds fusing at the burner to protect against component failures. The control also has redundant motor relays that are checked for proper operation every heat cycle.

Variations to the burner circuits may occur due to optional temperature, pressure, and vacuum switches that control burner operation. Note that when external switches are used to control motor operation they must be sized correctly for the rated current or a relay should be installed to isolate the switches from the motor's full load current.

B. Combustion Set-up

As soon as burner motor starts rotating bleed all the air from the pump. (Required with single-pipe systems.)

WARNING **Explosion and Fire Hazard**

Failure to follow these instructions could lead to equipment malfunction and result in heavy smoke emission, soot-up, hot gas puff-back, fire and asphyxiation hazards.

- Do not attempt to start the burner when excess oil has accumulated in the appliance, the appliance is full of vapor, or when the combustion chamber is very hot.
- Do not attempt to re-establish flame with the burner running if the flame becomes extinguished during start-up, venting, or adjustment.
- **Vapor-Filled Appliance:** Allow the unit to cool off and all vapors to dissipate before attempting another start.
- **Oil-Flooded Appliance:** Shut off the electrical power and the oil supply to the burner and then clear all accumulated oil before continuing.
- If the condition still appears unsafe, contact the Fire Department. Carefully follow their directions.
- Keep a fire extinguisher nearby and ready for use.

To bleed the pump, attach a clear plastic hose over the vent fitting. Loosen the fitting and catch the oil in an empty container. Tighten the fitting when all air has been purged from the supply system. Note: If the burner stops after a flame is established, the unit probably requires additional bleeding. Continue to bleed the system until the pump is primed and a flame is established when the bleed valve is closed.

C. Set Combustion with Instruments

1. Allow the burner to run for approximately 5 to 10 minutes.
2. Follow these four steps to properly adjust the burner:

   Step 1: Adjust the air until a trace smoke level is achieved.

   Step 2: At the trace of smoke level, measure the CO_2 (or O_2). This is the vital reference point for further adjustments.

   Step 3: Increase the air to reduce CO_2 by 1 percentage point (O_2 will be increased by approximately 1.4 percentage points).

   Step 4: Recheck the smoke level. It should be zero.
3. This procedure provides a margin of reserve air to accommodate variable conditions.
4. Once the combustion level is set, tighten the fasteners on the air band and air shutter.
5. Start and stop the burner several times to ensure satisfactory operation.
6. Test the equipment safety controls to verify they function according to the manufacturer's specifications.

Figure 9. – Air supply components

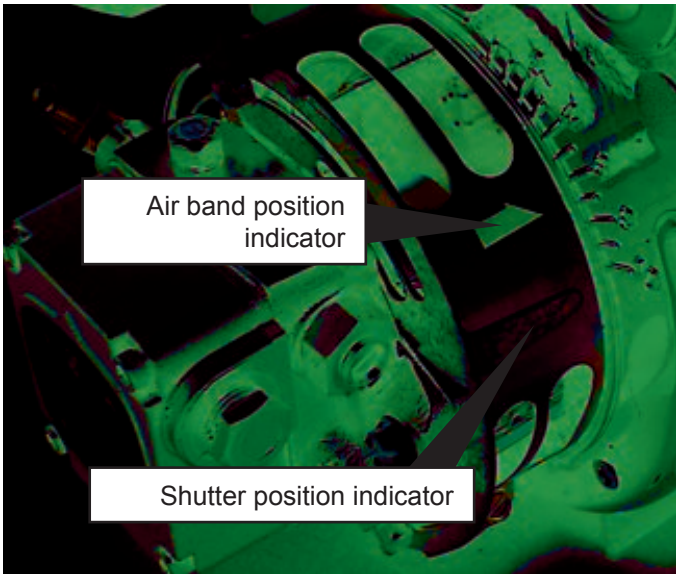

Maintain & Service Burner

A. Owner's Information

WARNING **Professional Service Required**

Incorrect installation, adjustment, and use of this burner could result in severe personal injury, death, or substantial property damage from fire, carbon monoxide poisoning, soot or explosion.

Please read and understand the manual supplied with this equipment. This equipment must be installed, adjusted and put into operation only by a qualified individual or service agency that is:

- Licensed or certified to install and provide technical service to oil heating systems.
- Experienced with all applicable codes, standards and ordinances.
- Responsible for the correct installation and commission of this equipment.
- Skilled in the adjustment of oil burners using combustion test instruments.

The installation must strictly comply with all applicable codes, authorities having jurisdiction and the latest revision of the National Fire Protection Association Standard for the installation of Oil-burning Equipment, NFPA 31 (or CSA-B139 and CSA-B140 in Canada).
Regulation by these authorities take precedence over the general instructions provided in this installation manual.

Have your equipment inspected at regular intervals by a qualified service agency to assure continued proper operation. The burner should be adjusted using dedicated combustion test equipment. Failure to properly set the burner could result in inefficient operation, and/or conditions that could potentially cause severe personal injury, death or substantial property damage.

B. Owner Service and Maintenance

Properly installed and maintained, your ADC burner will provide years of efficient, trouble-free operation. Please take care of your equipment by following the warnings provided and by immediately contacting your qualified service agency if your burner is not operating properly. This equipment should be serviced only by a qualified service agency. The appropriate test instruments must be used.

Daily

Check the area around your burner/equipment to make sure:

- ○ Nothing is blocking the burner inlet air openings.
- ○ Air ventilation openings are clean and unobstructed and the exhaust is not crusted.
- ○ No combustible materials are stored near the equipment.
- ○ There are no signs of oil or water leakage around the burner or equipment.

Extended Down Time

If the equipment will be stored for an extended period of time, insure that the fuel tank is full and add a fuel stabilizer to the tank.

Regular Service/Maintenance

Have your burner, serviced annually by your qualified service agency. The following components/assemblies should be checked/adjusted/replaced on a regular basis. Refer to the Replacement Parts exploded view for part locations.

- ☐ Replace the oil supply line filter, if applicable. The line filter cartridge must be replaced to avoid contamination of the pump and nozzle.
- ☐ Inspect the oil supply system. All fittings should be leak-tight. The supply lines should be free of water, sludge and other restrictions.
- ☐ Remove and clean the pump strainer.
- ☐ Verify the nozzle is the one originally specified by the appliance manufacturer and replace the nozzle with one having the exact specifications from the same manufacturer.
- ☐ Clean and inspect the electrodes for damage, replacing any that are cracked or chipped.
- ☐ Check electrode tip settings. Replace electrodes if tips are rounded.
- ☐ Inspect the igniter spring contacts. Clean or replace if corroded.

- ☐ Clean the cad cell, if applicable.
- ☐ Make sure Low Firing Rate Baffle is in place, if required, for the burner application. Omitting the baffle can result in unacceptable burner combustion.
- ☐ Inspect all gasket including the igniter base plate gasket. Replace any that are damaged or missing.
- ☐ Clean the blower wheel, air inlet, air guide, retention head and static plate of any dirt, asphalt or other material.
- ☐ Check motor current. The amp draw should not exceed the nameplate rating. Check all wiring for loose connections or damaged insulation.
- ☐ Check the pump pressure and cutoff function.
- ☐ Check primary control safety lockout timing, if applicable. Refer to the information supplied by the control manufacturer for procedures.
- ☐ Check ignition system for proper operation.
- ☐ Inspect the exhaust system for soot accumulation or other restriction.
- ☐ Clean the equipment thoroughly according to the manufacturer's recommendations.
- ☐ Check the burner performance using test instruments.
- ☐ It is good practice to make a record of the service performed and the combustion test results.

Troubleshooting

Oil burners that are designed for use on road maintenance equipment are built to take temperature extremes, vibration, and rough handling. When performing the following troubleshooting steps, we assume that the oil burner motor and ignition transformer operate continuously and the oil solenoid valve, which controls oil flow, is cycled by the equipment controls. We also assume that there is power to the burner and fuel in the tank.

In addition to typical mechanics tools, it is recommended to have the following equipment on hand.

- ○ Meter capable of measuring volts, ohms and amps,
- ○ ignition transformer tester,
- ○ smoke pump tester,
- ○ combustion analyzer, and
- ○ 0 to 200 psi pressure gauge.

See ***Table 4*** on following page for troubleshooting steps.

Table 2. Nozzle Flow Rate by Size

Nozzle flow rate U. S. gallons per hour of No. 2 fuel oil when pump pressure (psig) is:					
Nozzle Size (rated at 100 psig)	**125 psi**	**140 psi**	**150 psi**	**175 psi**	**200 psi**
0.40	0.45	0.47	0.49	0.53	0.56
0.50	0.56	0.59	0.61	0.66	0.71
0.60	0.67	0.71	0.74	0.79	0.85
0.65	0.73	0.77	0.80	0.86	0.92
0.75	0.84	0.89	0.92	0.99	1.06
0.85	0.95	1.01	1.04	1.13	1.20
0.90	1.01	1.07	1.10	1.19	1.27
1.00	1.12	1.18	1.23	1.32	1.41
1.10	1.23	1.30	1.35	1.46	1.56
1.20	1.34	1.42	1.47	1.59	1.70
1.25	1.39	1.48	1.53	1.65	1.77
1.35	1.51	1.60	1.65	1.79	1.91
1.50	1.68	1.77	1.84	1.98	2.12
1.65	1.84	1.95	2.02	2.18	2.33
1.75	1.96	2.07	2.14	2.32	2.48
2.00	2.24	2.37	2.45	2.65	2.83
2.25	2.52	-	-	-	-

Table 4. Troubleshooting Chart

Symptom	Possible Cause
Oil Not Igniting	**If the burner is not igniting, the burner motor, drive coupling, and oil pump are operating and oil is flowing to the nozzle through the solenoid valve, check the following possibilities.** 1. Check the air shutter adjustment. If the air shutter is opened too far, the flow of air may prevent the arc from reaching the oil spray. This may appear as a white vapor exhaust from the heater. [Refer to section *"Start up burner and set combustion"*] 2. The ignition system may have failed to supply an adequate arc to ignite the oil. Check the battery and charging system to insure a continuous supply of 11 to 16 volts DC (15 amps). [Refer to section *"Nozzle Assembly Maintenance"*] 3. Check the electrodes for wear and damage. Insure that the electrodes are adjusted properly. [Refer to section *"Nozzle Assembly Maintenance"*]
No Flame	**If there is no flame, the burner motor and igniter operate continuously and the oil solenoid valve is functional, check the following possibilities.** 1. Check for a plugged oil nozzle. [Refer to section 3] 2. If the coil on the solenoid valve is actuating, insure that the valve is opening or closing properly. [Refer to section *"Fuel Supply"*] 3. Check for sufficient fuel pressure. Pressure is 100 psig with valve energized, unless otherwise noted. [Refer to section *"Drive Component Maintenance"*] 4. Check the pump pressure. Check for air in fuel lines. 5. Check burner for broken motor coupling. If the coupling is broken check pump rotation prior to replacing the coupling. [Refer to section *"Drive Component Maintenance"*] 6. Check for contaminated fuel and/or partially plugged fuel filter. [Refer to section *"Fuel Supply"*]
Motor Not Operating	**If the blower motor is not operating, check the following possibilities.** 1. Check voltage at the motor to insure that switches and relays, in line with the motor, are operating properly. [Refer to section *"Burner Wiring"*] 2. Check pump and motor shaft operation. They should work freely without binding. [Refer to section *"Drive Component Maintenance"*]
No Oil Spray	**If the blower motor is operating, there is fuel in the tank, but oil does not spray out the end of the nozzle, check the following possibilities.** 1. Check for a broken or stripped coupling between the pump and the motor. [Refer to section *"Drive Component Maintenance"*] 2. Check the pump output for oil. [Refer to section *"Drive Component Maintenance"*] 3. Check operation of the oil valve. [Refer to section *"Drive Component Maintenance"*] 4. Check for a plugged nozzle. [Refer to section *"Nozzle Assembly Maintenance"*] 5. Check for air in the oil line. [Refer to section *"Nozzle Assembly Maintenance"*] 6. Check for fuel contamination or plugged filter. [Refer to section *"Nozzle Assembly Maintenance"*]
Fluctuating or No Pump Pressure	**If the pump pressure, as determined by a pressure gauge, is erratic or does not exist, check the following possibilities.** 1. Check motor rotational speed. Low rpm can cause erratic or no pump pressure. [Refer to section *"Drive Component Maintenance"*] 2. Check for a broken or worn motor coupling. [Refer to section *"Drive Component Maintenance"*] 3. Check that the pump turns freely. [Refer to section *"Drive Component Maintenance"*] 4. Check for air leaks in the lines. [Refer to section *"Fuel Supply"*] 5. Check for oil froth at the bleed point. [Refer to section *"Fuel Supply"*] 6. Check voltage at the motor. [Refer to section voltage rating on nameplate] 7. Check for fuel contamination or partially plugged filter.
Slow Motor Rotation	**If the blower motor is not operating at the rpm's listed on the nameplate, check the following.** 1. Check the supply voltage to the motor. [Refer to section voltage rating on nameplate] 2. Check for free operation of the motor shaft and pump assembly. [Refer to section *"Drive Component Maintenance"*]

Replacement Parts

For best performance specify genuine *Beckett* replacement parts

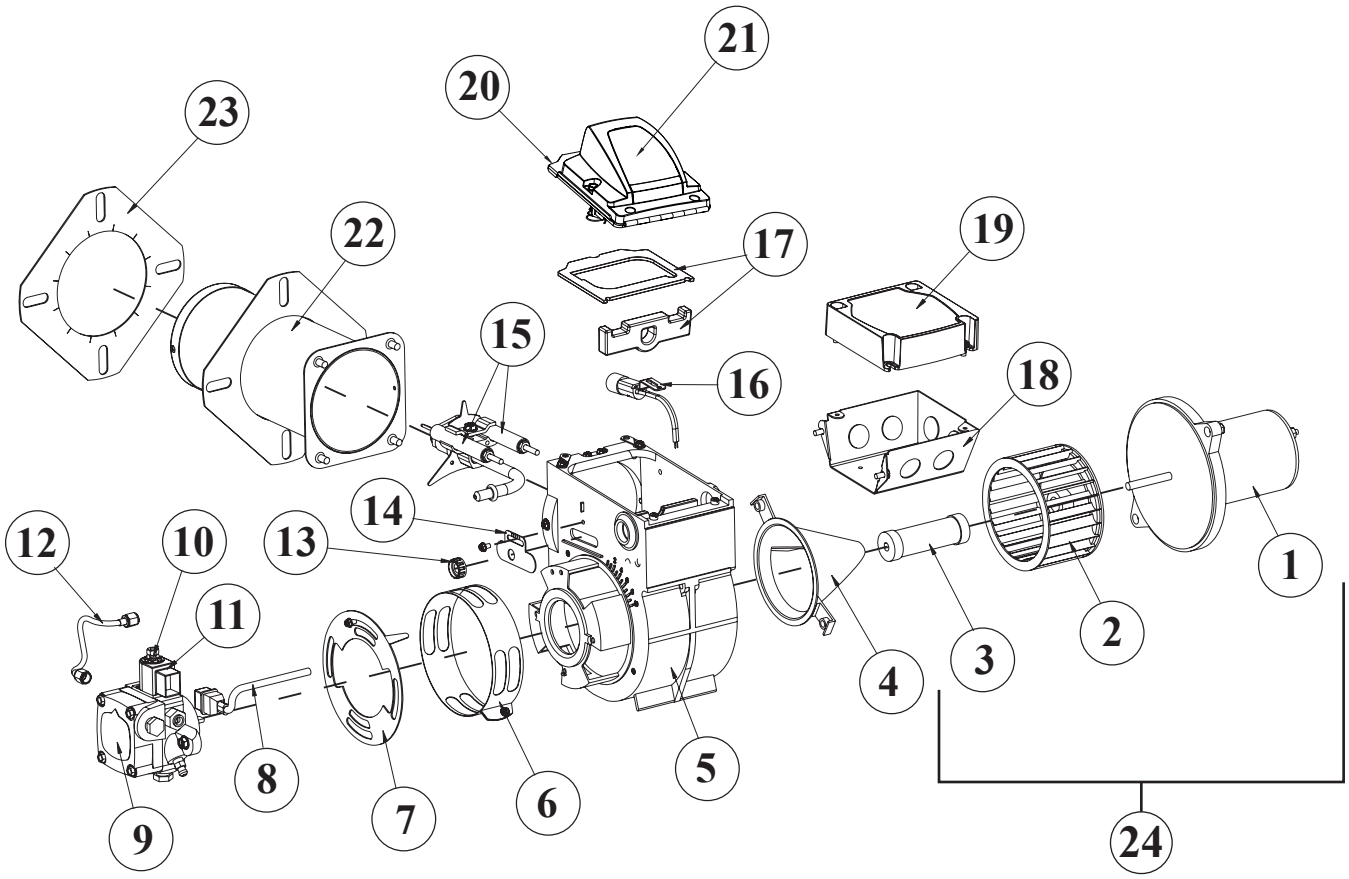

Illustration #	Description	Part#
1	DC Motor	n/a
2	Blower Wheel	2999U
3	Coupling	2140501
4	Air Guide	31231U
5	Burner Housing - Black	5874BKU
6	Air Band	5151501
7	Air Shutter - 4 Slot Air Shutter - 8 Slot	3709 3494
8	Cord set	21807
9	Pump (CleanCut)	2184402U
10	Valve Stem	21877U
11	12 Volt Coil	21754U
12	8” Copper Tubing	5394
13	Escutcheon Plate Spline Nut	3666

Illustration #	Description	Part#
14	Escutcheon Plate	3493
15	Electrode Kit over 3-5/8”	578731
16	Cad Cell Detector	7492/7006U
17	Igniter Gasket Kit	51411
18	4X4 Wiring Box Kit	5770
19	Control Kit	7556x-xxxxU*
20	Igniter Assy with baseplate	5218301U
21	Igniter only	5218309
22	Air Tube Ass’y	Specify
23	Flange Mounting Gasket	Specify
24	Motor Kit with Blower Wheel and Coupling	52145U
Not Shown	Tune-up Kit for 30 & 35 Air Tube Lengths	578730

* ‘**X**’s *indicate timing options. Contact Beckett for available part numbers.*

SECTION 2 FUNCTIONS MENU AND PROGRAM MODE GUIDE

1. Enter/Exit:

Program mode .Press and hold ▼ ▲ 3 sec.

2. Single level navigation:

3. View/Change Option:

View Function/Option.

Autotune Option value.

Change Option value (or press ✱ ▼). Release: check for correct selection.

4. Changing menu levels:

Locate level Function.

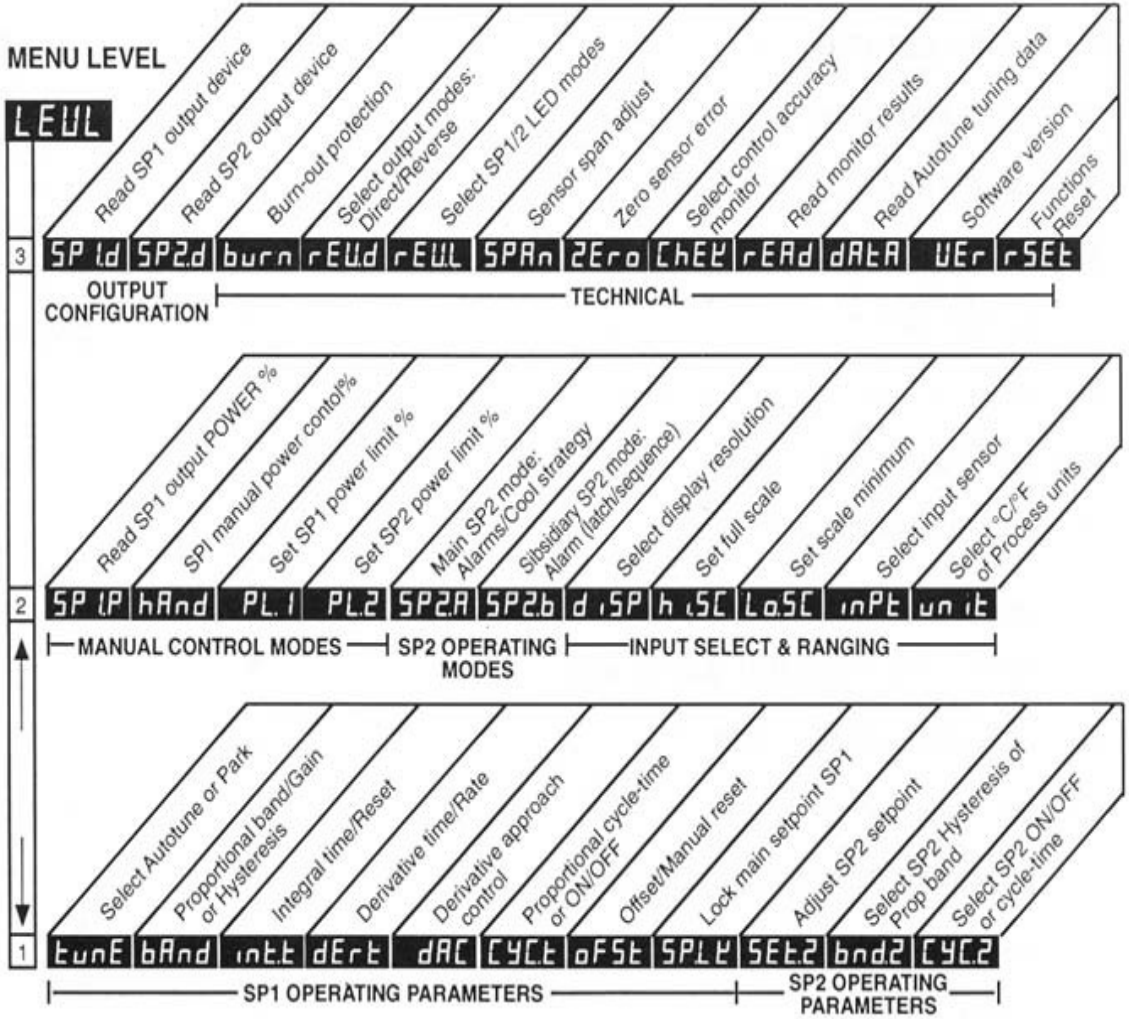

12 VOLT SUPPLY 50 AMP RELAY

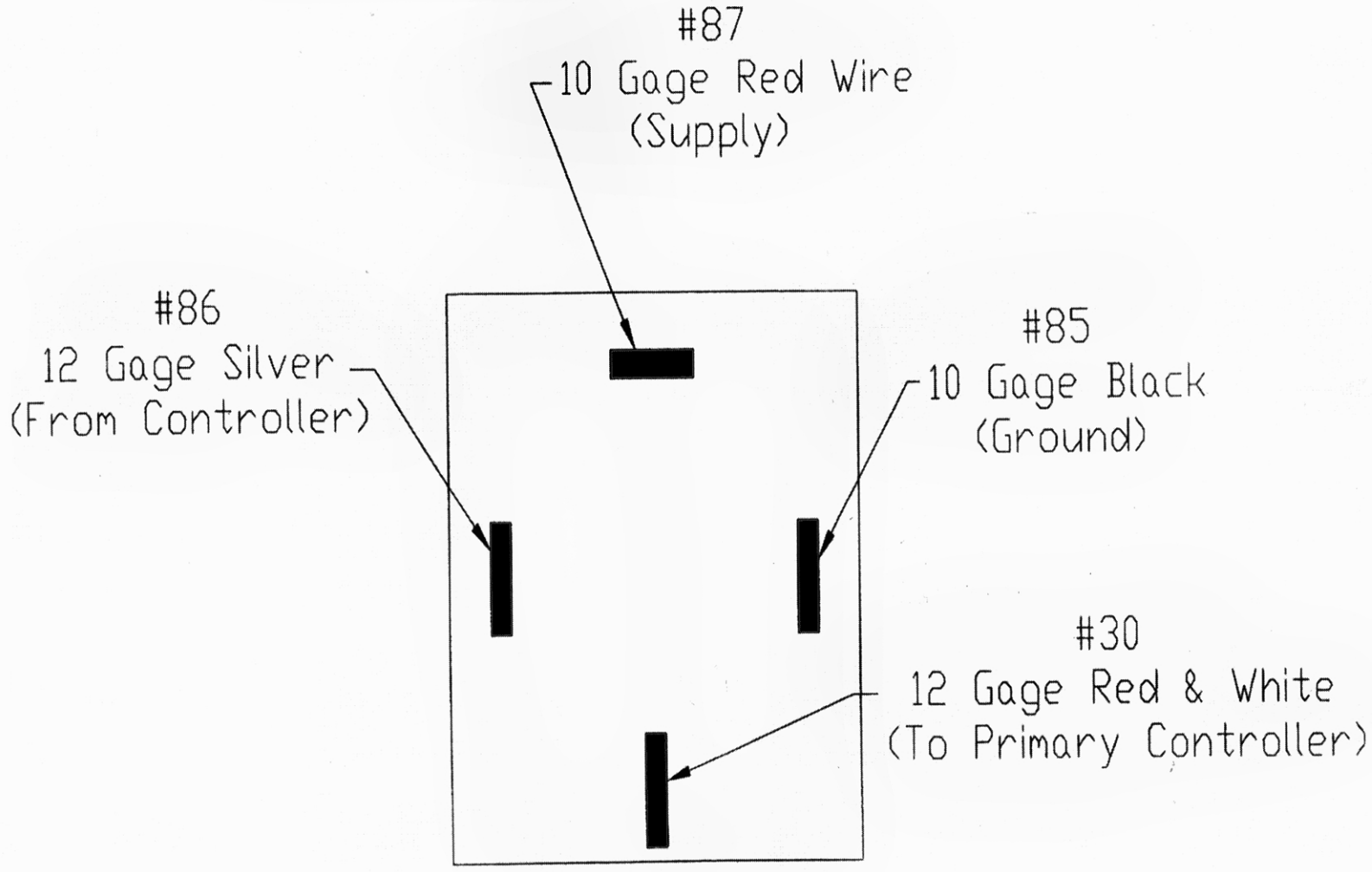

BREAKAWAY SWITCH INSTALLATION INSTRUCTIONS

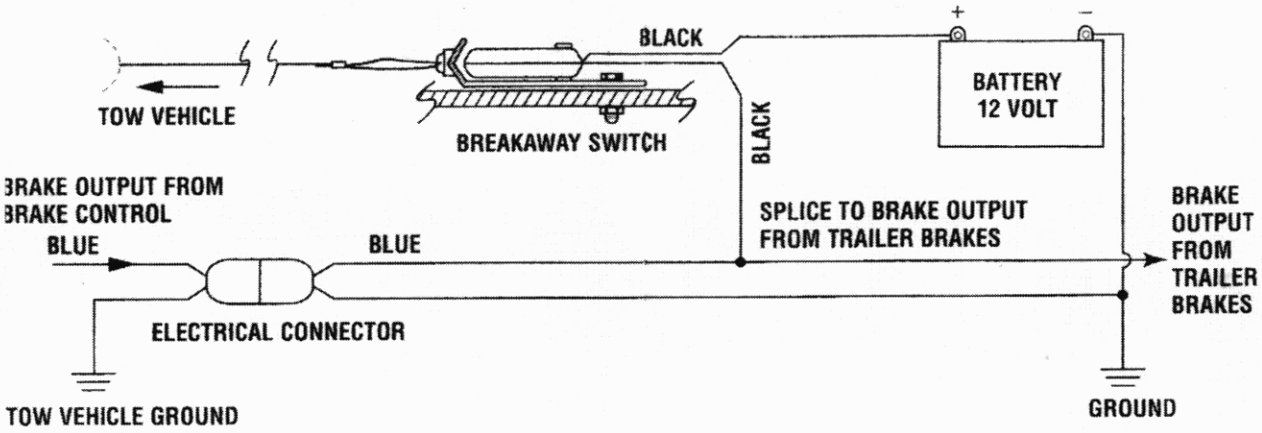

READ THIS FIRST:
Read and follow all instructions carefully before installing or operating the Breakaway Switch. Keep these instructions for future reference.

Important Facts to Remember

1. ATTENTION INSTALLER: Please give this sheet to consumer upon completion of installation.
2. SAFETY ITEM: Solder all wire connections.
3. Check condition of battery prior to each trip.
4. ⚠ WARNING Disconnect trailer plug before testing breakaway unit. Failure to do so will result in severe damage to electronic brake control.
5. ⚠ WARNING Check your breakaway system periodically to insure that wiring and connections are secure. A short or an open circuit can result in a no-brake condition.
6. For optimal performance, it is recommended that breakaway devices be replaced every 3-5 years.
7. For Technical Assistance and Warranty Information call: 1-888-785-5832 or www.tekonsha.com

Installation Guide

1. Mount Battery Case securely to frame, jack post or other suitable location on trailer with Breakaway Switch Cable towards tow vehicle.
2. ⚠ WARNING Switch location should be selected to ensure unobstructed line of pull in event of vehicle separation.
3. Bolt breakaway switch bracket to frame of trailer or battery case bracket using 1/4" bolt and lock nut or (2) 1/4" jam nuts. (Bolt and nuts not included in kit.)
4. ⚠ WARNING Do not over tighten bolt. Switch must be able to pivot.
5. Check and install battery.
6. Wire per schematic. Properly insulate all connections.
7. Attaching to tow vehicle: Attach Breakaway Switch Cable to tow vehicle frame being certain the cable does not drag on the ground and no strain or restriction is placed on the cable.
8. ⚠ WARNING Do not hook cable to safety chain loop or hitch ball.